Water Heater Unit

Auxiliary heating *Thermo Top E* e1 00 0003

Auxiliary heating *Thermo Top C* e1 00 0002

Auxiliary heating *Thermo Top P* e1 00 0104

Installation Instructions

Skoda Roomster

Gasoline

From model year 2006

For left-hand drive vehicles only



WARNING!

Hazard warning:

Incorrect installation or repair of Webasto heating systems may cause a fire or result in the emission of carbon monoxide, which can be fatal. Serious or fatal injuries can be caused as a result.

Specialist company training, technical documentation, specialized tools and equipment are required to install and repair Webasto heating and cooling systems.

NEVER attempt to install or repair Webasto heating or cooling systems if you have not successfully completed the company training and thereby acquired the required technical skills or if you do not have access to the required technical documentation, tools and equipment needed to carry out correct installation and repairs.

ALWAYS follow all Webasto installation and repair instructions and observe all warning instructions.

Webasto does not accept any liability for defects and damage that are attributable to an installation by untrained staff.

Ident. No.: 1311744A €10 fee
© Webasto AG

Table of Contents

Validity	2	Preparing the Installation Location	11
Heater Unit / Installation Kit	3	Preparing the Heater Unit	11
Foreword	3	Installing the Heater Unit	12
General Instructions	3	Exhaust System	13
Special Tools	3	Water Connection	15
Explanatory Notes on the Document	4	Fuel Connection	19
Preliminary work	5	Combustion Air	22
Heater unit installation location	5	Final Work	23
Preparing the Electronics	6	Operating instructions for the end customer	24
Electrical Connection	7	Tank Mounting Template	25
Automatic air conditioning blower control	8	Tank Extracting Device Template	26
Remote Start Option	10		

Validity

Manufacturer	Model	Type	EG-BE No. / ABE
Skoda	Roomster	5J	e11 * 2001 / 116 * 0291 * ...

Engine type	Engine type	Power in kW	Engine capacity in cm³
BTS	Gasoline	77	1598

Vehicle and engine types, equipment variants as well as national specifications, which are not listed in these installation instructions, have not been tested. Installation according to these installation instructions may, however, be possible.

The installation location of a time switch and summer / winter switch should be confirmed with the end customer before installation.

Heater Unit / Installation Kit

Amount	Description	Order no.:
1	Commercial supply of required control	See price list
1	Installation kit for Skoda Roomster Gasoline	1311740A

Also required for automatic air conditioning:

Amount	Description	Order no.:
1	Installation kit for automatic air conditioning	1311752A

Recommended heater unit for the relevant vehicle class:

Vehicle	Heater unit
Compact car	Thermo Top E
Mid-class, station wagon	Thermo Top C
Luxury, van, off-roader	Thermo Top P



The choice of heater unit is based on the size of the vehicle passenger compartment and the customer's comfort requirements.

Foreword

These installation instructions apply to Skoda vehicles with Roomster Gasoline – validity, see page 2 – from model year 2006 and later, assuming technical modifications to the vehicle do not affect installation, any liability claims excluded. Depending on the vehicle version and equipment, modifications may be necessary during installation with respect to these installation instructions.

However, the stipulations in the "installation instructions" and "operating and maintenance instructions" for the *Thermo Top C/P/E* are to be observed in any event.
The corresponding rules of technology and any information from the vehicle manufacturer should be observed during the installation work.

General Instructions

Installation should be carried out according to the general, standard rules of technology. Unless specified otherwise, fasten hoses, lines and cable harnesses to original vehicle lines and cable harnesses using cable clips.
Sharp edges should be fitted with edge protectors (split open plastic hose).
Spray unfinished body areas, such as bore holes, with anti-corrosion wax (Tectyl 100K, Order no. 111329).

Special Tools

- Torque spanner for 2.0 - 10 Nm
- Vice-grip wrench
- M8 riveting nut tool

Explanatory Notes on the Document

To provide you with a quick overview of the individual working steps, you will find an identification mark on the outside top right corner of the page in question.

Mechanics 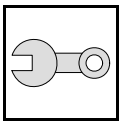

Electrics 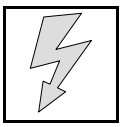

Water Connection 

Fuel connection 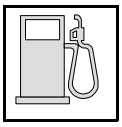

Exhaust System 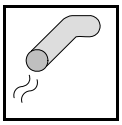

Combustion air 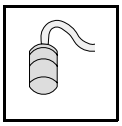

Special features are highlighted using the following symbols:

 Specific risk of injury or fatal accidents.

 Specific risk of damage to components.

 Specific risk of fire or explosion.

 Reference to general installation instructions of Webas- to components or to the manufacturer's vehicle-specific documents.

 Reference to a special technical feature.

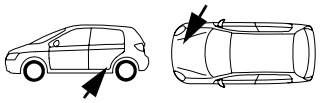 The arrow in the vehicle icon indicates the position on the vehicle and the viewing angle.

Preliminary work

WARNING!

- Open the tank cap, ventilate the tank.
- Close the tank cap again.
- Disconnect the battery.
- Let off pressure in the cooling system.
- Copy the factory number from the original type label to the duplicate type label.
- Remove years that do not apply from the duplicate label.
- Attach the duplicate label (type label) in the appropriate place.
- Loosen the right and left wheel-house panel.
- Remove the engine cover underride protection
- Remove the right fuel line underride protection
- Remove the bumper.
- Completely remove the air filter with intake hose.
- Dismantle the windshield wipers.
- Completely remove the cooling water reservoir cover.
- Remove the engine compartment cooling water reservoir cover
- Remove the right rear single seat.
- Open right tank mounting service lid.
- Remove tank mounting according to manufacturer's instructions.
- Remove the footwell cover on the driver side.
- Loosen the fuse box on the driver’s side.
- Remove air conditioning control according to manufacturer's instructions.

Remove page 24 "Operating instructions for the end customer" and insert with vehicle operating instructions.

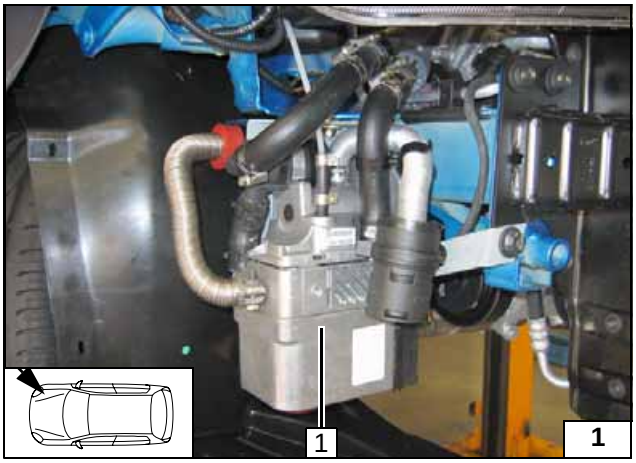

Heater unit installation location

1 Heater unit

Installation location

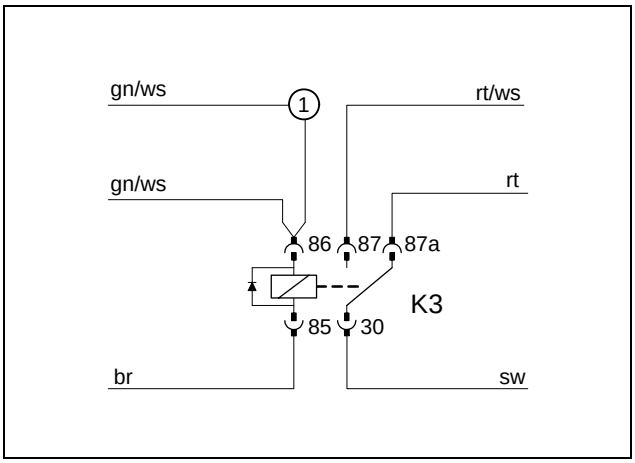

Preparing the Electronics

Only for automatic air conditioning

Reconnect according to the circuit diagram. Fasten the wire section **1** to the blower cable harness with insulating tape.

Preparing the cable harness

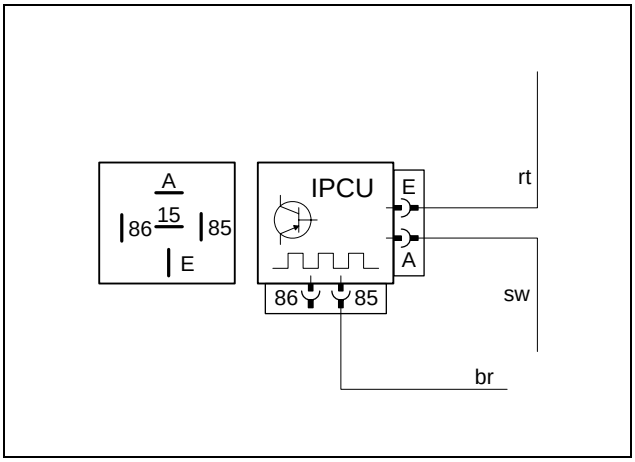

Connect the enclosed wires to the IPCU. Crimp Ø 8mm cable socket to the brown wire. Check and, if necessary, set the following IPCU settings before the installation.

Duty-Cycle: 100%
Frequency: 14 kHZ
Voltage: 3.3V
Function: High side active

Pre-assembling the IPCU

Electrical Connection

fuse holder, K3 relay

1 K3 relay, M5x16 bolt, washer, M5 flanged nut
2 Fuse holder angle bracket, bolt M5x16, washer, M5 flanged nut
3 Fuse holder

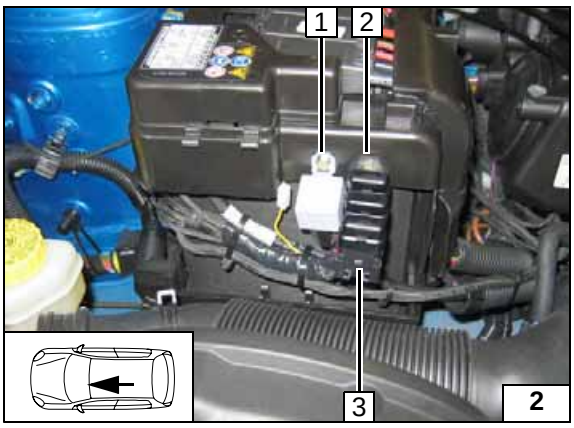

Summer / winter switch option

1 Summer / winter switch, hole Ø 12 mm

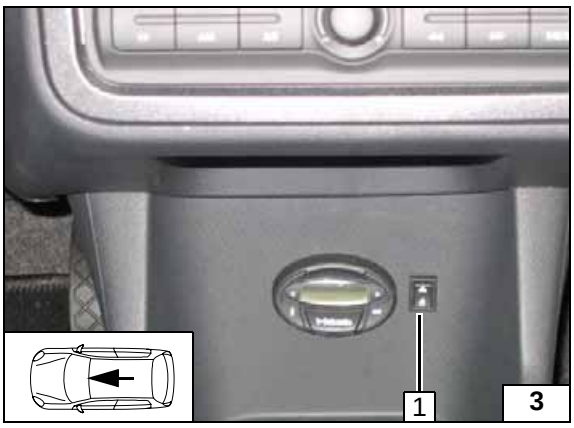

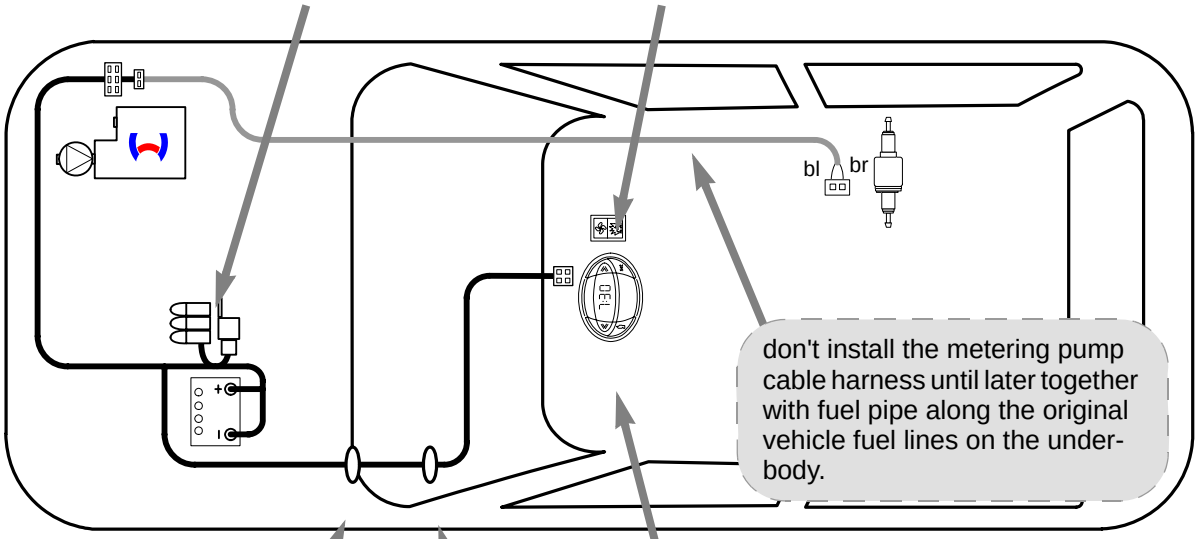

Cable harness installation diagram

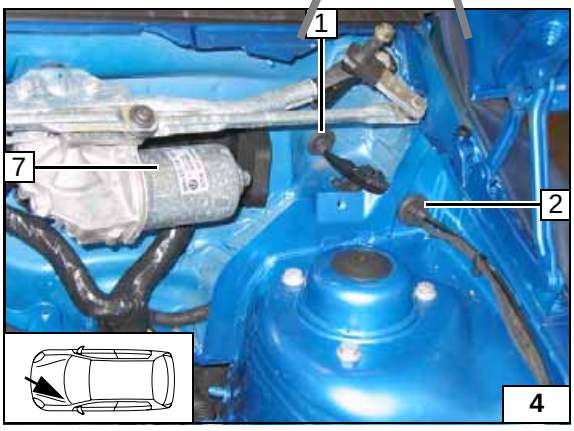

Cable harness feed-through

1 Passenger compartment protective rubber sleeve
2 Cooling water reservoir cover protective rubber sleeve

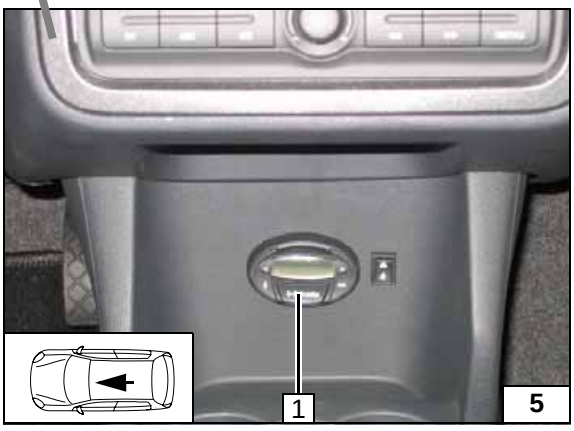

Time switch

1 Time switch

Automatic air conditioning blower control

Circuit Diagram

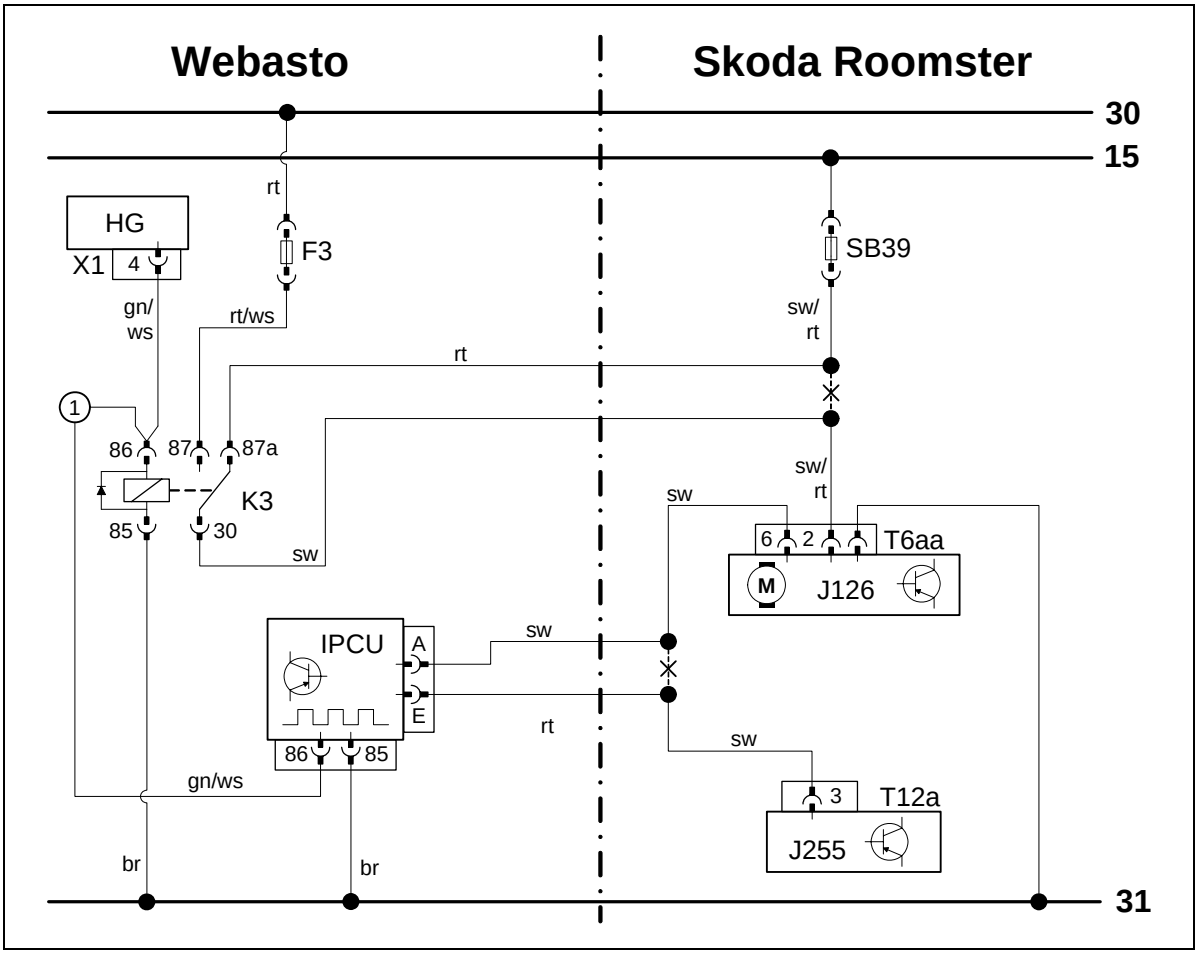

Legend

Webasto components		Vehicle components		Colors and symbols	
HG	Heater unit TT-C/E	J126	blower unit	rt	red
X1	6-pin connector	J255	Air conditioning control	ws	white
F3	Fuse	SB39	Fuse 25A	sw	black
K3	Blower relay	T...	plug-in connections	br	brown
				gn	green
IPCU settings:					
Duty-Cycle	100%				
Frequency	14kHz				
Function	High side active			**X**	Splitting point
Voltage	3.3V			Cable colors may vary.	

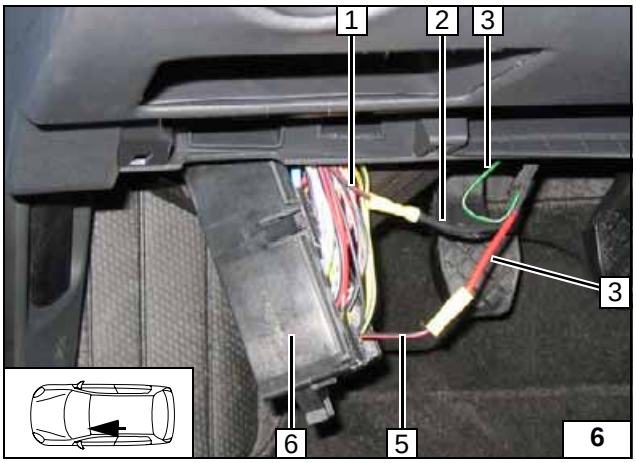

Connection to the central electrics **6** for the blower module.
Connect with enclosed blade receptacles according to the circuit diagram.

1 Red/black (rt/sw) wire from fuse SB39 25A.
2 Wire (sw) from K3/30
3 Run the additional green/white (gn/ws) wire to the IPCU.
4 Cable (rt) to K3/87a
5 Black/red (sw/rt) wire to the connector T6aa.

Central electrics connection

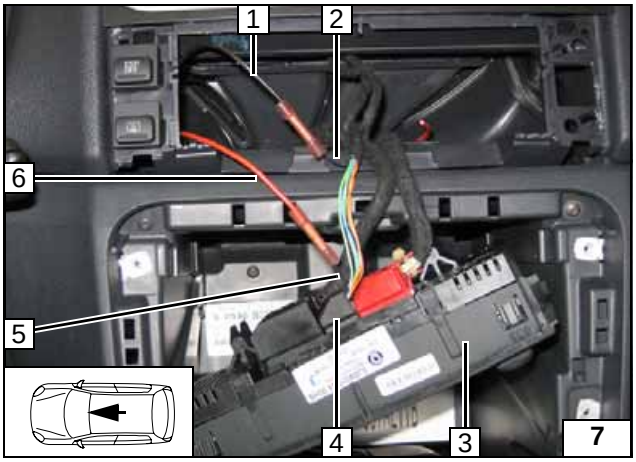

Connection to connector T12a **4** pin 3 from the air conditioning control **3**.
Reconnect according to the circuit diagram.

1 Black (sw) wire from IPCU/A
2 Black (sw) wire from the blower unit.
5 Black (sw) wire to connector T12a
6 Red (rt) wire to the IPCU/E

Connecting the air conditioning control

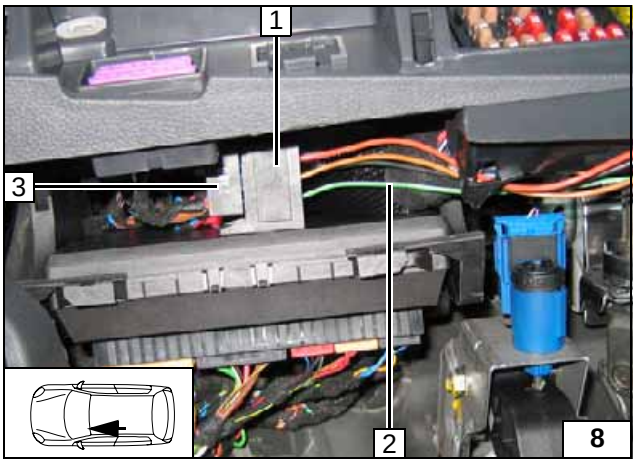

Connect green/white (gn/ws) wire **2** to the IPCU/86.
Before inserting, program the ICPU **3** accordingly (see Preparing the electronics).
Secure the IPCU socket **1** with double-sided adhesive tape.

Mounting the IPCU

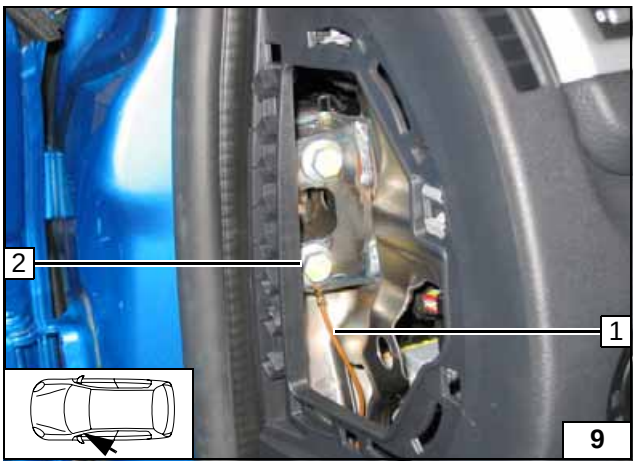

1 Brown (bn) wire from IPCU/85, Ø 8mm cable socket
2 Original vehicle bolt

IPCU ground connection

Remote Start Option

1 Assemble the receiver with double-sided adhesive tape as shown in the figure.

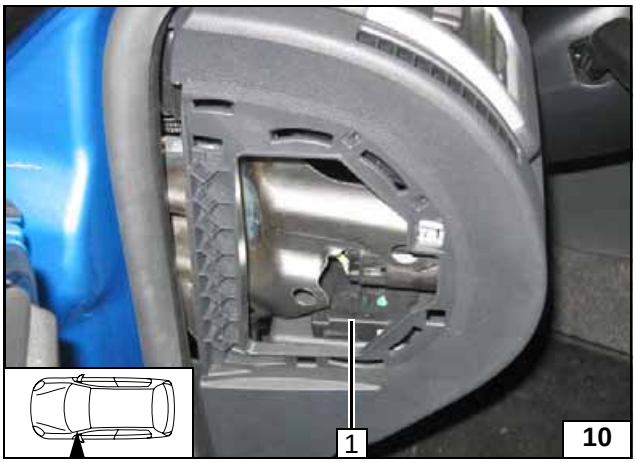

Assembling the receiver

1 Antenna

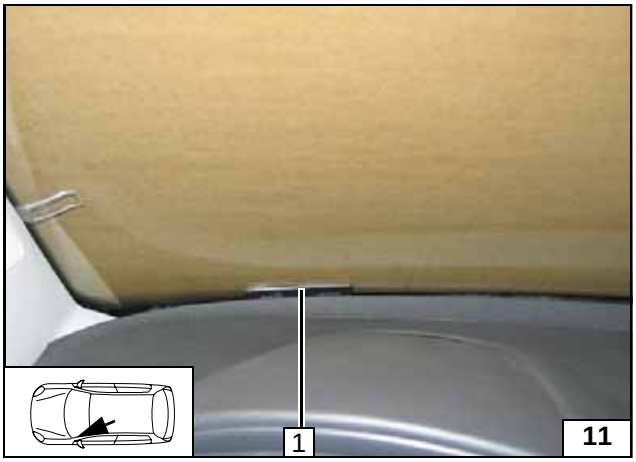

Assembling the antenna

Temperature sensor for HTM100 only

1 Assemble the temperature sensor with double-sided adhesive tape as shown in the figure.

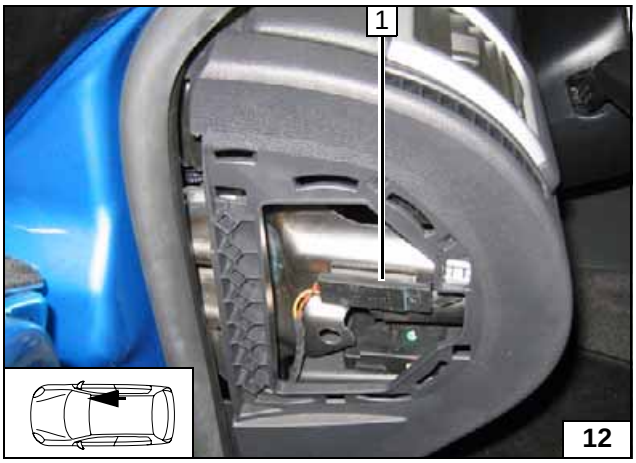

Assembling the temperature sensor

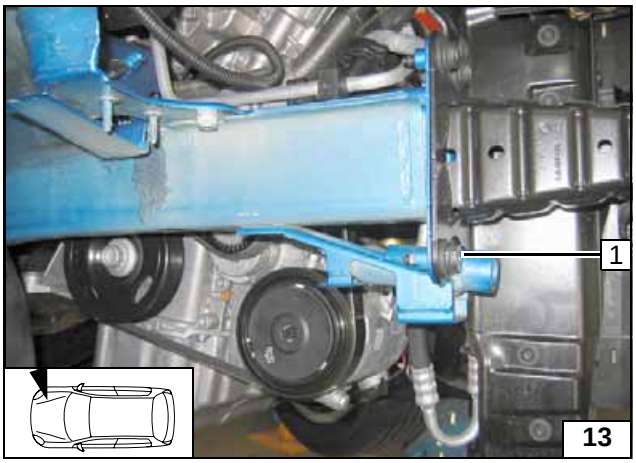

Preparing the Installation Location

Disassemble original vehicle bolt **1**, this will be used again.

Unscrew the bolt

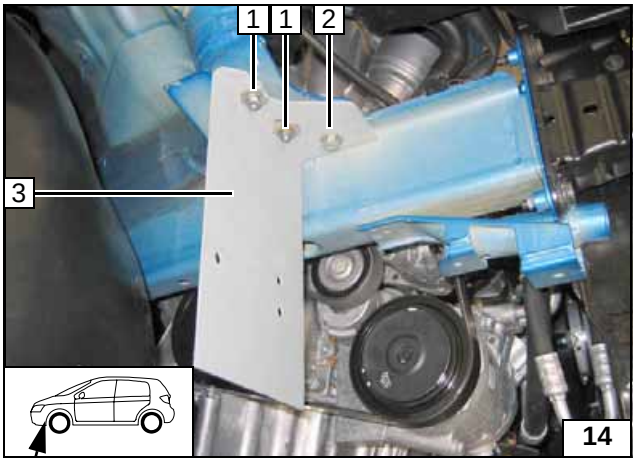

At position **1**, insert one 5 mm washer each between the lamp mounting and the bracket.

1 Flanged nut, body washer, spacer washer [2x each]
2 M6x30 bolt, spring washer, washer
3 Bracket

Assembling the bracket

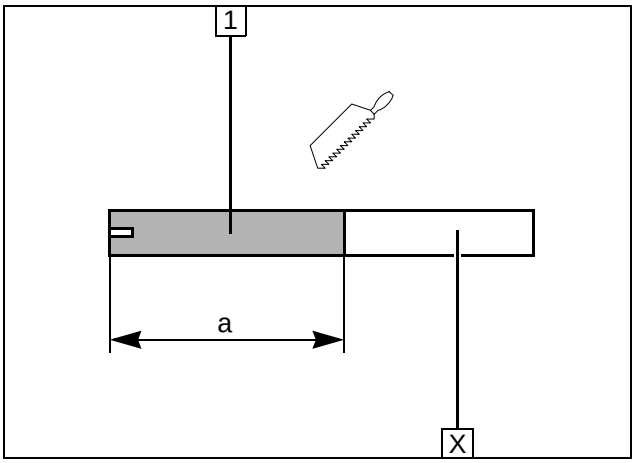

Preparing the Heater Unit

1 Combustion air pipe
a = 230mm

Dispose of section **X**

Cutting the combustion air pipe to length

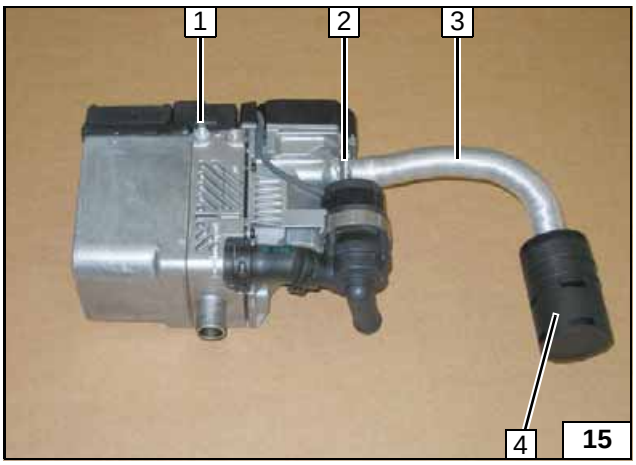

Ejot screw bolt **1**, tightening torque 10 Nm.

2 Ø 27mm hose clamp
3 Combustion air intake pipe
4 Combustion air intake silencer

Assembling the vacuum line.

Installing the Heater Unit

Assembling the Heater Unit

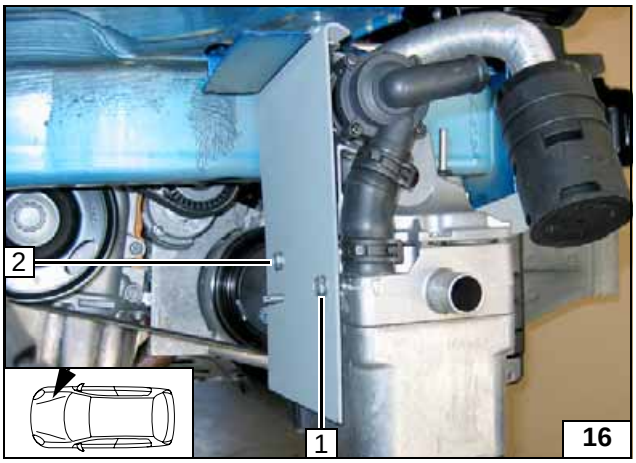

Insert two Ø 6mm washers between the heater unit and the bracket in position **1**.
Ejot screw bolts tightening torque 10 Nm!

1 Ejotschraube, Unterlegscheibe [2x]
2 Ejot screw bolt

Assembling the Heater Unit

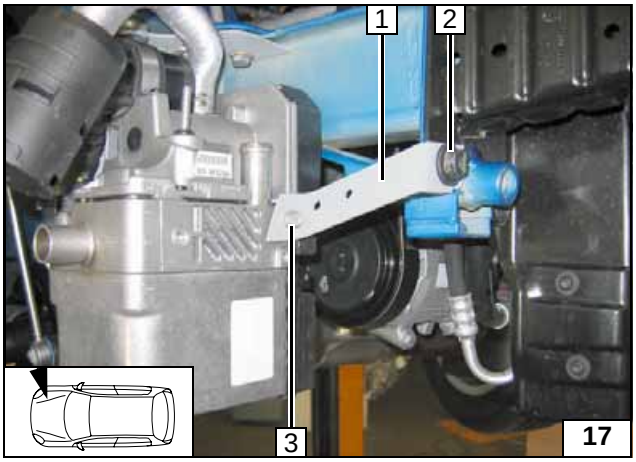

Ejot screw bolt **3**, tightening torque 10 Nm.

1 Strut
2 Original vehicle bolt

Slide on cable harness

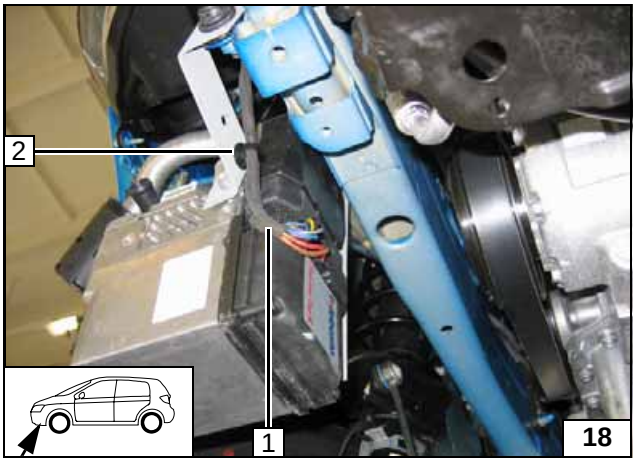

1 Heater unit cable harness
2 Clip-on cable clip in the strut bore hole

Inserting edge protection

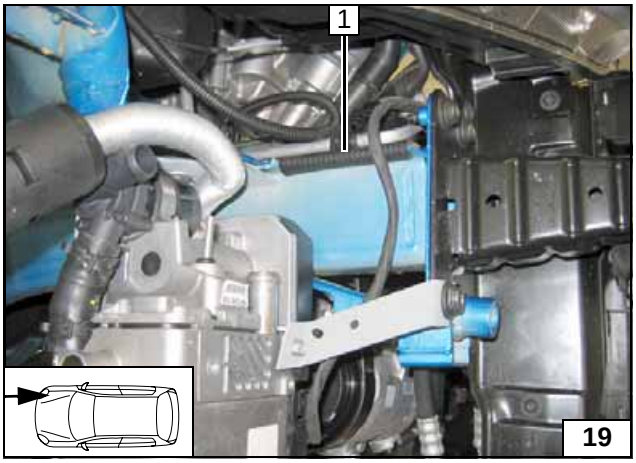

Divide the edge protection in the middle.

1 100mm edge protection

Exhaust System

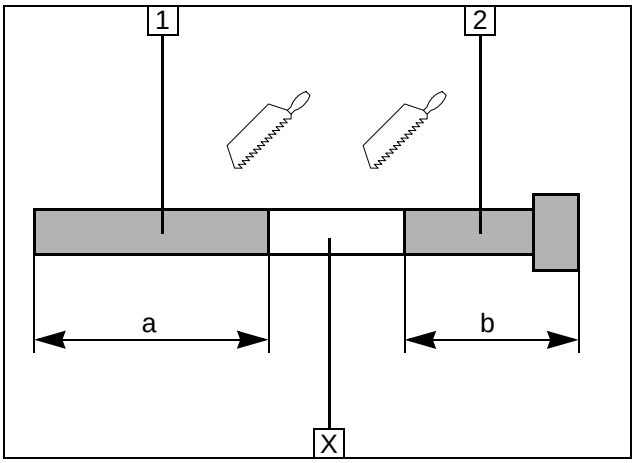

1 Exhaust pipe
a = 370mm
2 Exhaust end section
b = 175mm

Dispose of section **X**

Preparing the exhaust pipe

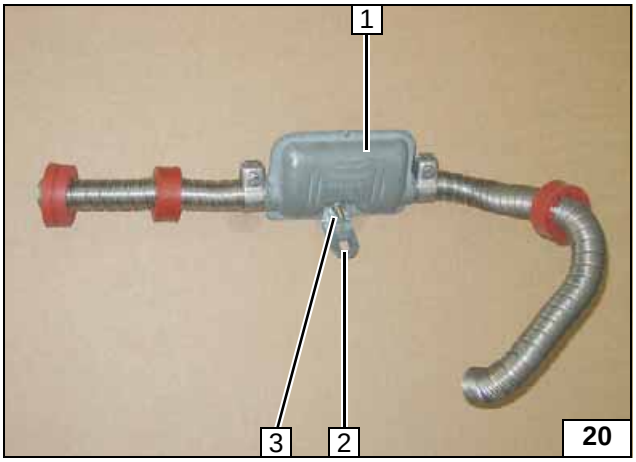

1 Exhaust silencer
2 Angle bracket
3 Bolt M6x20, flanged nut

Pre-assembling the silencer

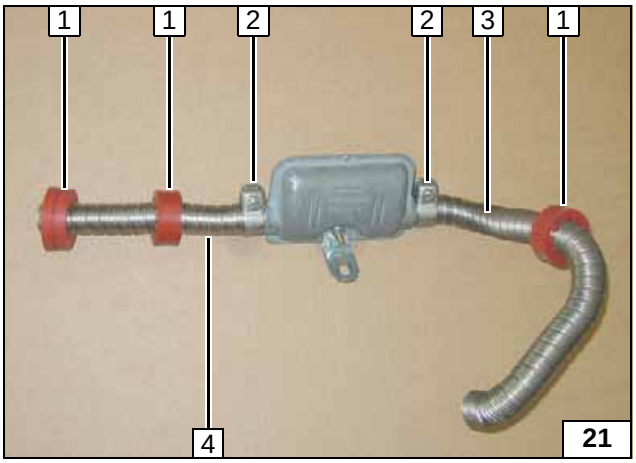

1 Slide on the red (rt) rubber profile [3x]
2 Hose clamp [2x]
3 Exhaust pipe
4 Exhaust end section

Pre-assemble exhaust system

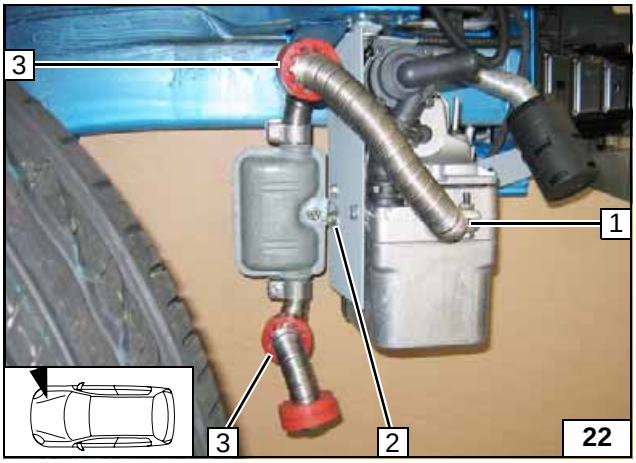

1 Hose clamp
2 Flanged nut on stay bolt
3 Position red (rt) rubber profile [2x]

Assembling the exhaust system

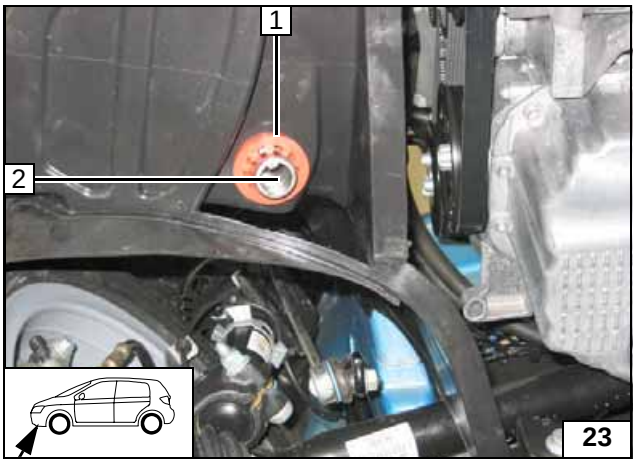

Drill Ø 42mm bore hole in the wheel-house panel at position **2**.
Align the exhaust end section **2** flush on the red rubber profile with groove **1** as shown in the figure.

Insert exhaust end section

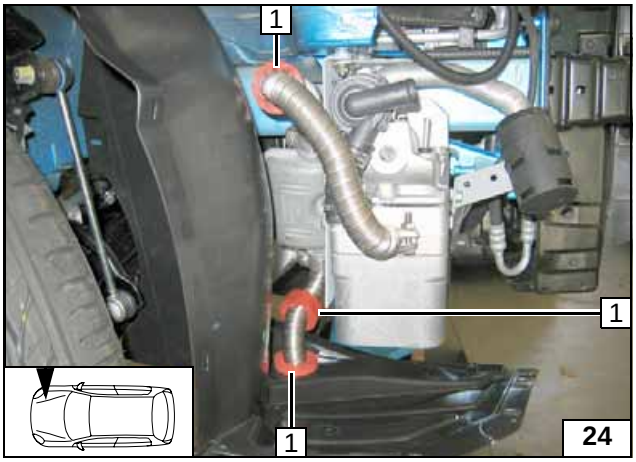

Align the rubber profile **1** [3x].
Ensure sufficient distance from adjacent components.

Positioning the rubber profile

Water Connection

WARNING!
Tighten all hose clamps to 2.0 + 0.5 Nm.
Any coolant running off should be collected using an appropriatecontainer.
Route hoses so that they are kink-free. Unless specified otherwise, always fasten using cable clips.
Position hose clamps and spring band clamps so that no other hose can be damaged. The connection should be "inline" based on the following diagram:

Water installation diagram

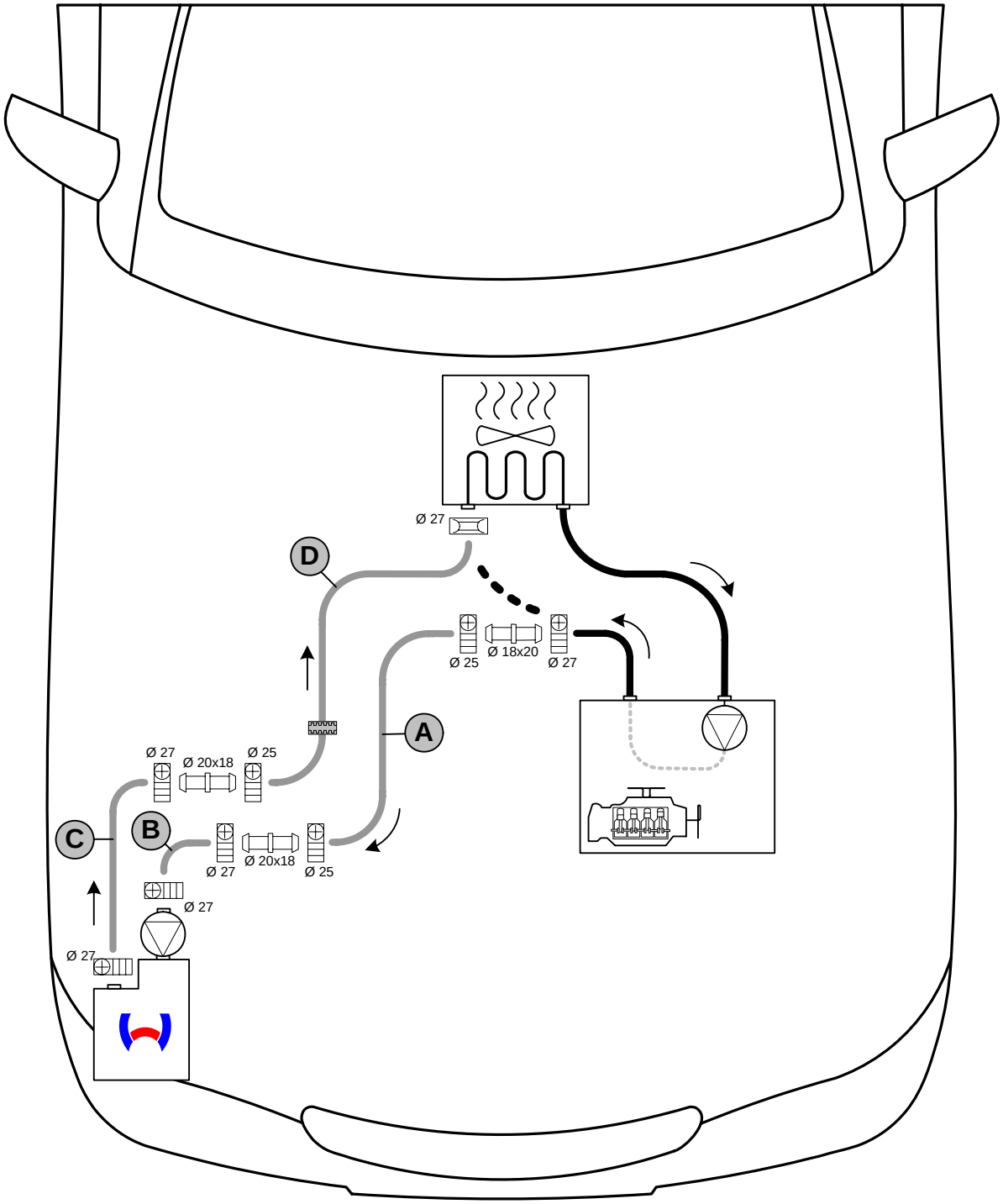

Symbol	Description
	Connecting pipe
	Black (sw) rubber profile

Symbol	Description
	Hose clamp

Symbol	Description
	Spring band clamp

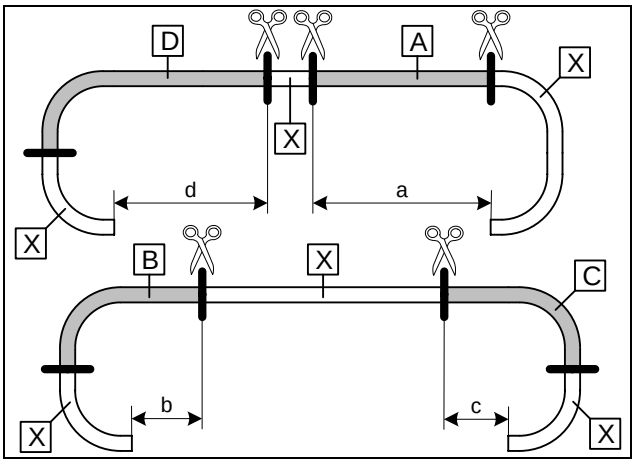

Hoses **A** and **D** Ø 18mm.
Hoses **B** and **C** Ø 20 mm.

a = 1,050mm
b = 60mm
c = 60mm
d = 920mm

Dispose of section **X**

Cutting water hoses into sections

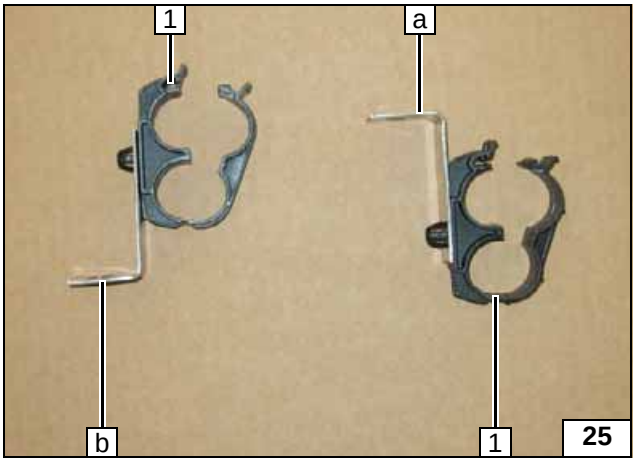

Pre-assemble bracket **a** and **b** as shown in the figure.

1 Hose bracket [2x]

Preparing the angle bracket

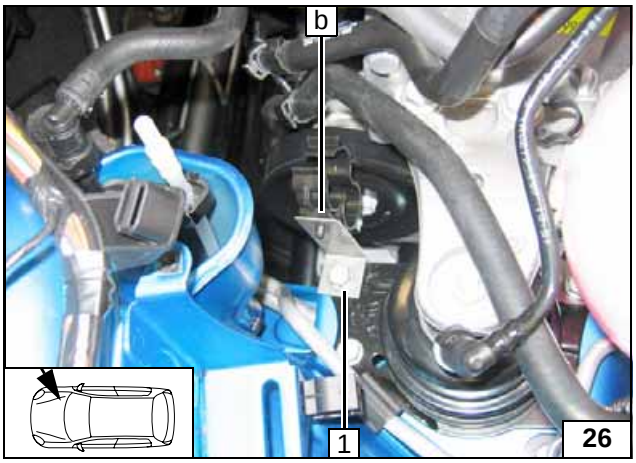

b Preassembled angle bracket
1 Original vehicle bolt

Assembling bracket b

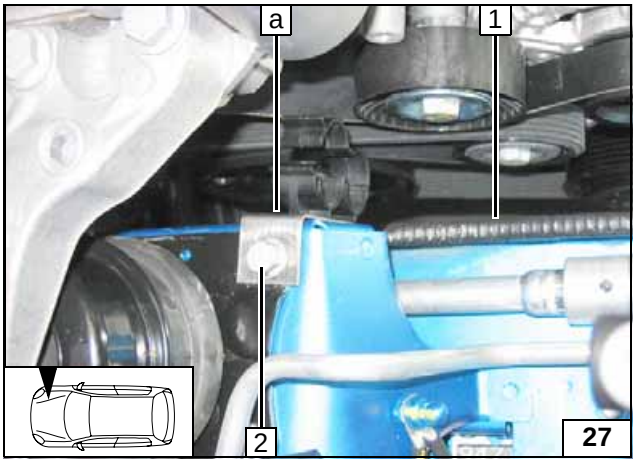

a Preassembled angle bracket
1 Insert 100 mm edge protection
2 Original vehicle bolt

Assembling bracket a

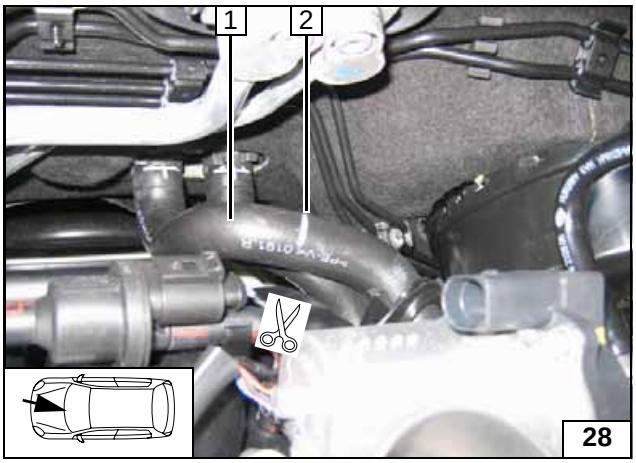

Pull the hose section **1** from heat exchanger inlet supports and dispose. The spring band clamp will be used again.

2 Cut location

Splitting point

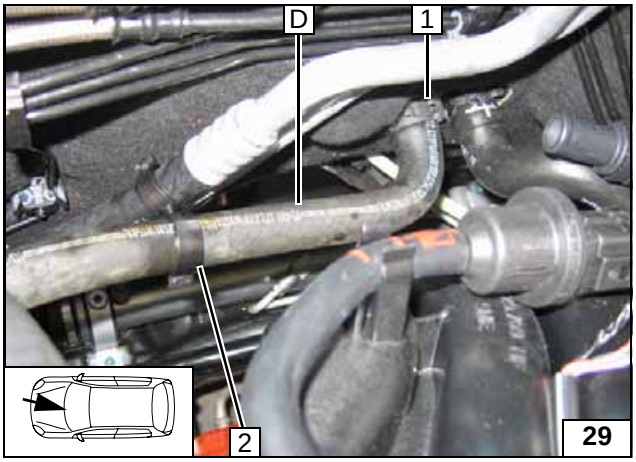

Connect hose **D** with 90° bend to the heat exchanger inlet supports.

1 Original vehicle spring band clamp
2 Spacer bracket

Connecting engine outlet

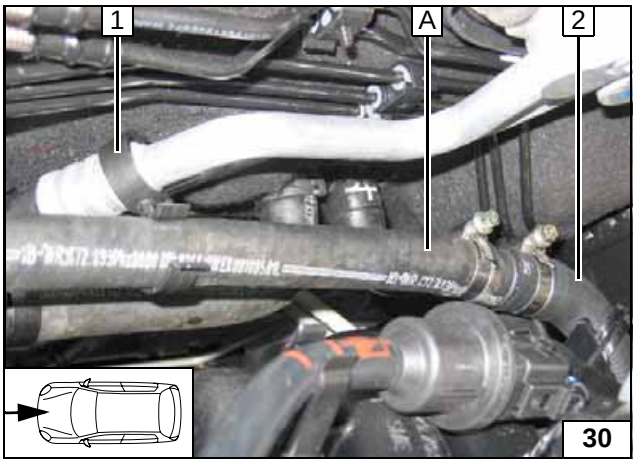

1 Spacer bracket
2 Engine exhaust hose section

Engine outlet connection

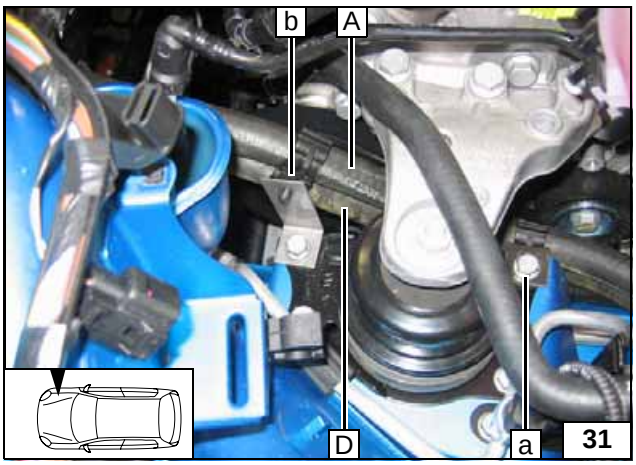

Run hose **A** and hose **D** through the prepared hose bracket (angled bracket **b** und **a**).

Placement in the engine compartment

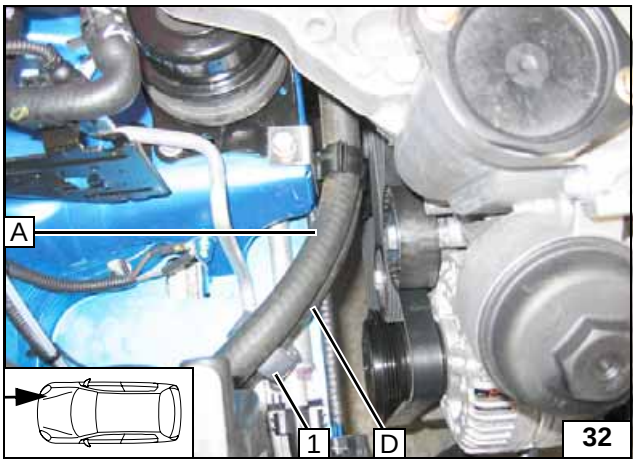

Slide rubber profile sw **1** onto hose **D** and position it.

Placement in the engine compartment

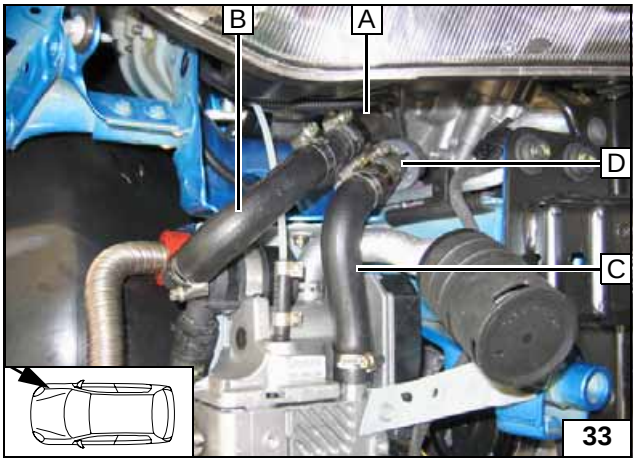

Before connecting, fill the water hoses with coolant. Connect hose **A** and **B**. Connect hose **C** and **D**.

Connecting the heater unit

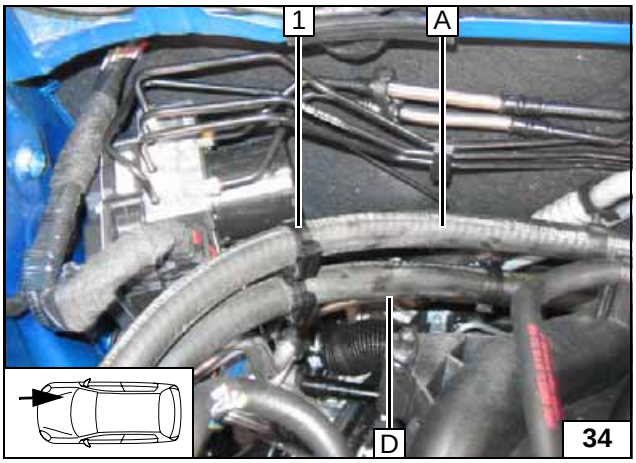

Insert double clip **1** between hose **A** and **D**.

Inserting clip

Fuel Connection

CAUTION!
Open the vehicle's tank-cap lock, ventilate the tank and then re-close the tank lock.

Catch any fuel running off with an appropriate container.

Install fuel line and metering pump cable harness so that they are protected against stone impact. Unless specified otherwise, always fasten using cable clips.
Fit the fuel line and cable harness with edge protectors around sharp edges.

WARNING!
The fuel line and cable harness to the metering pump should be installed based on the cable harness installation diagram.

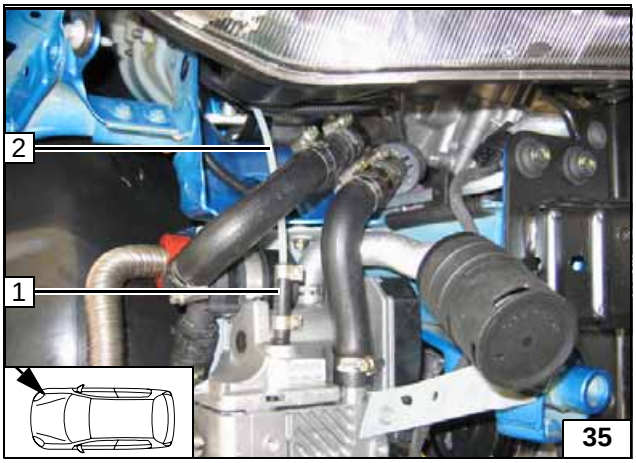

1 Hose section, Ø 10mm hose clamps [2x]
2 Fuel line

Connection to heater

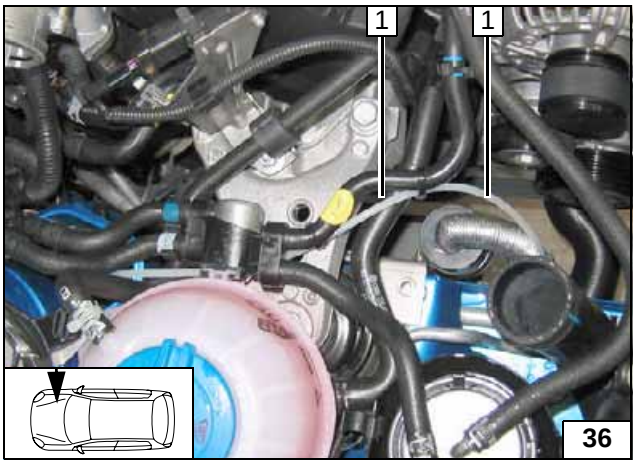

Run the fuel pipe **1** and metering pump cable harness through the line shaft to the metering pump installation location.

Installing lines

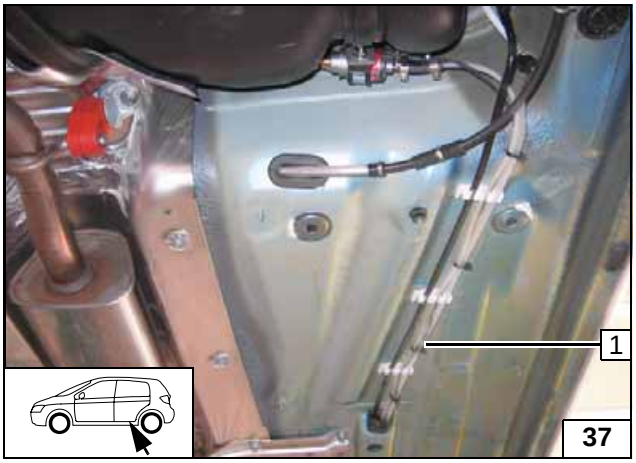

The installation location is to the right in front of the vehicle tank.

1 Metering pump cable harness, fuel line from the heater unit

Metering pump installation location

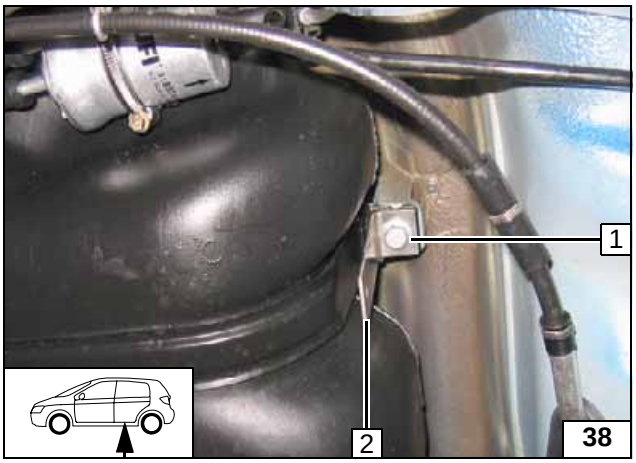

1 Original vehicle bolt
2 Angle bracket

Assembling the angle bracket

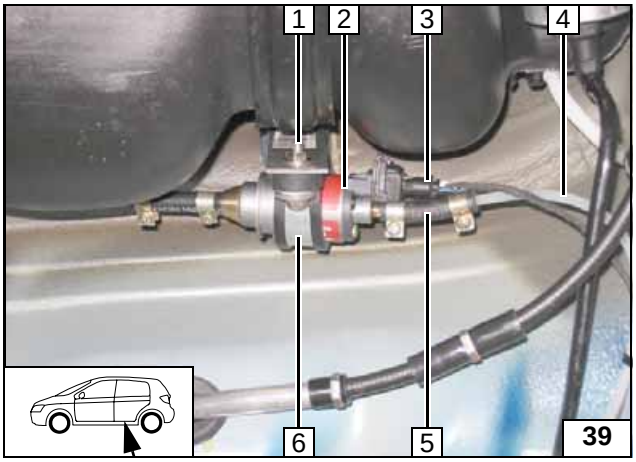

1 Silent block, flanged nut [2x]
2 Metering pump
3 Metering pump cable harness, connector assembled
4 Fuel line
5 Hose section, Ø 10 mm hose clamps [2x]
6 Rubberized tube clamp

Assembling the metering pump

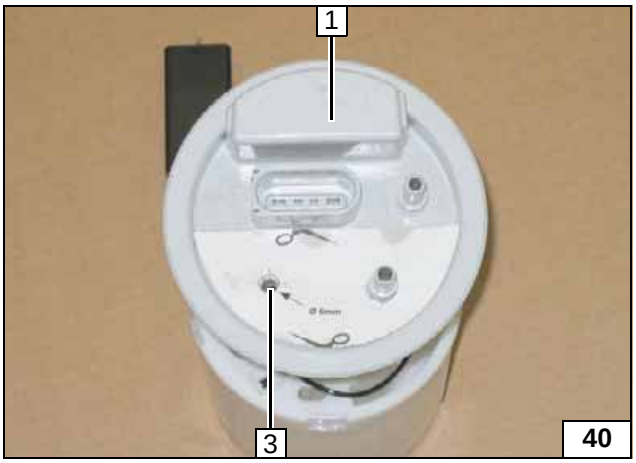

Remove the tank mounting**1** according to the manufacturer's instructions and take it apart.

2 Schablone
3 Copy the hole template, Ø 6mm bore hole

Fuel take-off

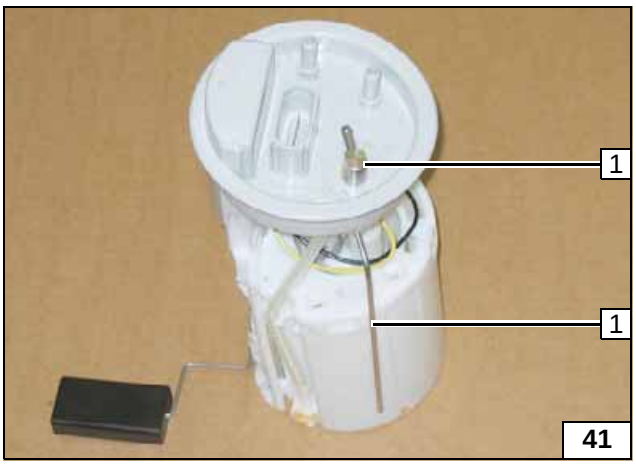

Shape, cut into sections, and insert the tank extracting device **1** according to the template, see the Installation Instructions.

Inserting tank extracting device

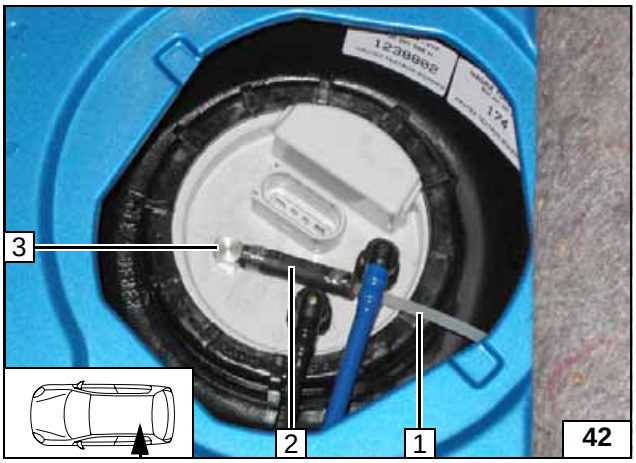

Install the tank mounting according to manufacturer's instructions.

3 Fuel line
3 Moulded hose, Ø 10 mm hose clamps [2x]
4 Tank extracting device

Connecting and disconnecting the fuel pipe

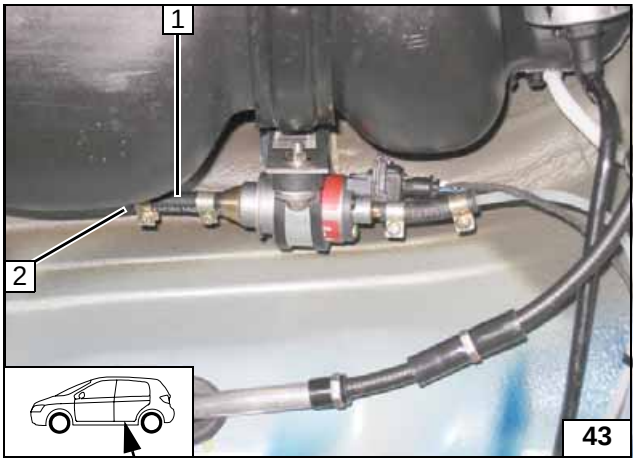

Fuel line **2** from the tank extracting device on the intake side of the metering pump [side without connector].
Check the position of the components; adjust if necessary. Check that they have free clearance.

1 Hose section, Ø 10mm hose clamps [2x]

Connection to metering pump

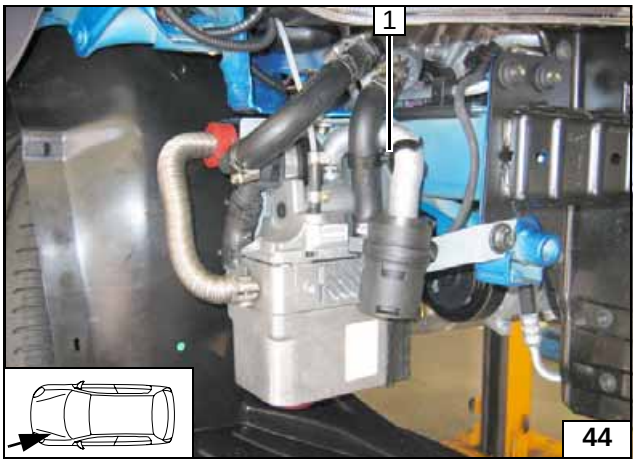

Combustion Air

1 Spacer bracket

Assembling the vacuum line.

Final Work

WARNING!
Reassemble disassembled components in reverse order.
Check that all hose lines, clips, and all electrical connections are securely fastened.
Secure all loose cables using cable clips.
Only use manufacturer-approved coolant.
Spray heating unit components with anti-corrosion wax (Tectyl 100K, Order No. 111329).

- Connect battery
- Fill and bleed the coolant circuit according to the vehicle manufacturer’s specifications.
- Set the time switch.
- Set the manual air conditioning or automatic air conditioning according to the "operating instructions for the end customer".
- Check that the auxiliary heating operates properly, see operating instructions / installation instructions.
- Attach the "Switch off auxiliary heating before re-fuelling" sticker onto the left side of the B-pillar.

Webasto
Feel the drive
Webasto AG
PO Box 80 - 82132 Stockdorf
- Hotfax 0395 / 5592-353

Operating instructions for the end customer

Please remove page and add to the vehicle operating instructions.

Note:
We recommend adjusting the heating time to the driving time
heating time = driving time
Example:
For a driving time of 20 minutes (one way) we recommend not exceeding 20 minutes of power on time.

It the summer / winter switch option is installed for the heater unit, switch this according to the season. The heater unit will then heat when set to Winter and only blow air to ventilate the passenger compartment when set to Summer.

Before parking the vehicle, make the following settings:



1 Temperature to "HI?.
2 Air outlet to windshield

Tank Mounting Template

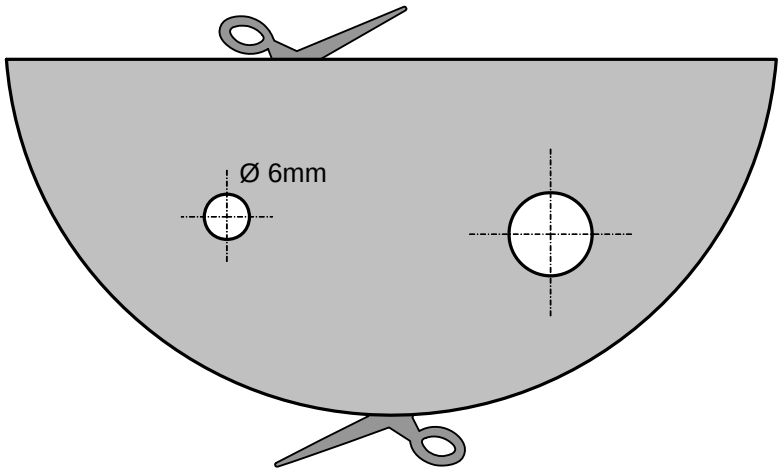

100mm

Scale 1:1

Compare the size of the printed version with dimension lines.
Permitted tolerance a maximum of 2%.

Set the printer settings to “no margin” or “minimize margins” and 100% of the normal size.

100mm

0

1311744A

Tank Extracting Device Template

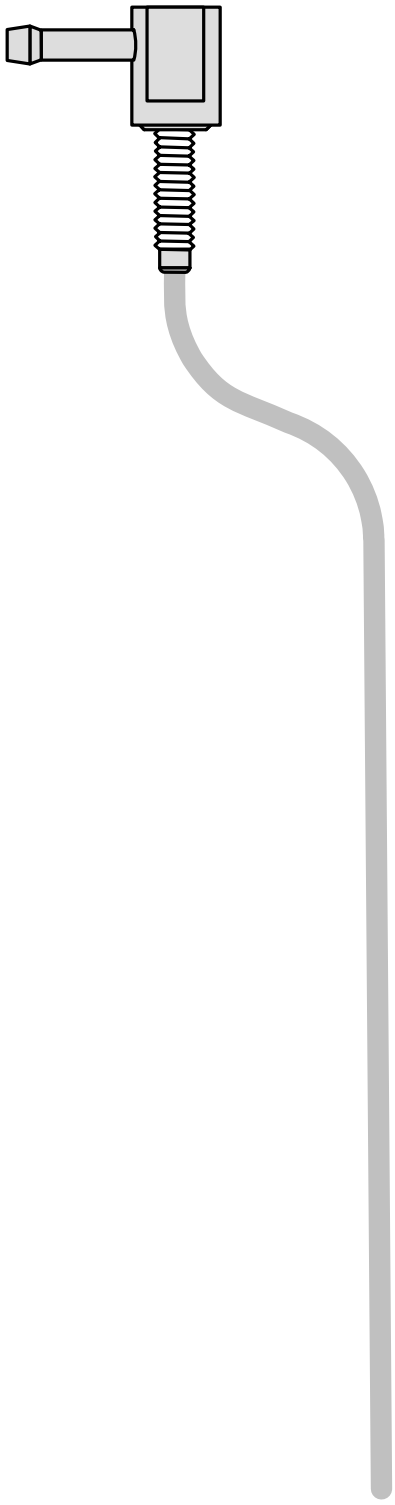

100mm

Scale 1:1

Compare the size of the printed version with dimension lines.
Permitted tolerance a maximum of 2%.

Set the printer settings to “no margin” or “minimize margins” and 100% of the normal size.

100mm

0

1311744A