Water Heater Unit

Webasto
Feel the drive

***Thermo Top E* Additional Heater** e1 00 0003

***Thermo Top C* Additional Heater** e1 00 0002

***Thermo Top P* Additional Heater** e1 00 0104

Installation Instructions

Skoda Roomster / Fabia II

Gasoline
from Model Year 2006
For left-hand drive vehicles only



WARNING!

Hazard warning:

Incorrect installation or repair of Webasto heating systems may cause a fire or result in the emission of carbon monoxide, which can be fatal. Serious or fatal injuries can be caused as a result.

Specialist company training, technical documentation, specialized tools and equipment are required to install and repair Webasto heating and cooling systems.

NEVER attempt to install or repair Webasto heating or cooling systems if you have not successfully completed the company training and thereby acquired the required technical skills, or if you do not have access to the required technical documentation, tools and equipment needed to carry out correct installation and repairs.

ALWAYS follow all Webasto installation and repair instructions and observe all warnings.

Webasto does not accept any liability for defects and damage that are attributable to installation by untrained staff.

Ident. No.:1311743B_EN Fee Euro 10.00
© Webasto AG

Table of Contents

Validity	2	Preparing installation location	12
Heater Unit/Installation Kit	3	Preparing heater unit	12
Foreword	3	Installing heater unit	13
General Instructions	3	Exhaust gas	14
Special Tools	3	Water	16
Explanatory Notes on Document	4	Fuel	20
Preliminary Work	5	Combustion air	23
Heater unit installation location	5	Final Work	24
Preparing electrical system	6	Operating Instructions for End Customer	25
Electrical Connections	7	Template for Fuel sender	26
Fan controller for manual air conditioning	8	Template for Fuel Standpipe	27
Automatic air-conditioning fan controller	9		
Remote option (Telestart)	11		

Validity

Manufacturer	Model	Type	EG-BE No./ABE
Skoda	Roomster	5J	e11 * 2001/116 * 0291 * ...
Skoda	Fabia II	54	e11 * 2001/116 * 0291 * ...

Engine type	Engine model	Output in kW	Displacement in cm³
BBM	Gasoline	44	1198
BZG	Gasoline	51	1198
BXW	Gasoline	63	1390
BTS	Gasoline	77	1598

Vehicle and engine types, equipment variants and national specifications not listed in these installation instructions have not been tested. However, installation according to these installation instructions may be possible.

The installation location of a digital timer and summer/winter switch should be confirmed with the end customer before installation.

Heater Unit/Installation Kit

Quantity	Description	Order No.:
1	Retail accessories with desired heater control	See price list
1	Installation kit for Skoda Roomster / Fabia II Gasoline	1311740B

Also required with automatic air-conditioning:

Quantity	Description	Order No.:
1	Installation Kit for Automatic Air-Conditioning	1311752A

Heater unit recommended for the respective vehicle class:

Vehicle	Heater unit
Compact car	Thermo Top E
Mid-size car, station wagon	Thermo Top C
Full-size car, van, offroader	Thermo Top P

The selection of the heater unit is based on the passenger compartment size of the vehicle and the level of comfort required by the customer!

Foreword

These installation instructions apply to Skoda Roomster / Fabia II Gasoline vehicles - for validity, see page 2 - from model year 2006 and later, assuming technical modifications to the vehicle do not affect installation, any liability claims excluded. Depending on the vehicle version and equipment, modifications may be necessary during installation with respect to these installation instructions.

However, the stipulations in the "installation instructions" and "operating and maintenance instructions" for the *Thermo Top C/P/E* must always be observed.
The corresponding rules of technology and any information from the vehicle manufacturer should be observed during the installation work.

General Instructions

Installation should be carried out according to the general, standard rules of technology. Unless specified otherwise, fasten hoses, lines and wiring harnesses to original vehicle lines and wiring harnesses using cable ties.
Sharp edges should be fitted with edge protectors (split-open plastic hose).
Spray unfinished body areas, e.g. drilled holes, with anti-corrosion wax (Tectyl 100K, Order No. 111329).

Special Tools

- Torque wrench for 2.0 - 10 Nm
- Hose clamping pliers
- M8 metric thread-setter kit

Explanatory Notes on Document

To provide you with a quick overview of the individual working steps, you will find an identification mark on the outside top right corner of the page in question.

Mechanical system

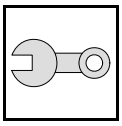

Electrical system

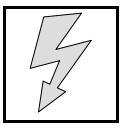

Coolant connection



Fuel connection

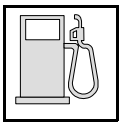

Exhaust system

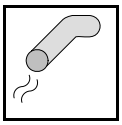

Combustion air

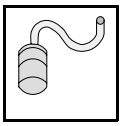

Special features are highlighted using the following symbols:



Specific risk of injury or fatal accidents.



Specific risk of damage to components.



Specific risk of fire or explosion.



Reference to general installation instructions of Webasto components or to the manufacturer's vehicle-specific documents.



Reference to a special technical feature.

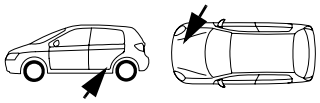

The arrow in the vehicle icon indicates the position on the vehicle and the viewing angle.

Preliminary Work

WARNING!

- Open fuel tank cap, ventilate tank.
- Close the tank cap again.
- Disconnect the battery "earth" or "ground" connection.
- Depressurize the cooling system.
- Copy the factory number from the original type label to the duplicate type label.
- Remove years that do not apply from the duplicate label.
- Attach the duplicate label (type label) in the appropriate place.
- Detach the wheel well trim on the left and right.
- Remove the underride protection of the engine cover.
- Remove the underride protection of the fuel lines on the right.
- Remove bumper
- Remove the air filter together with the intake hose.
- Remove the windshield wiper.
- Remove the entire coolant reservoir cap.
- Remove the coolant reservoir trim in the engine compartment.
- Remove the wiper linkage.
- Remove the rear right single seat (only on Roomster).
- Fold up the right rear bench seat (only on Fabia).
- Open the right-hand fuel sender service lid.
- Remove the fuel-tank sending unit in accordance with the manufacturers specifications.
- Remove the footwell cover on the driver's side.
- Detach the fuse box on the driver's side.
- Remove the A/C control panel according to the manufacturer's instructions (only with automatic air-conditioning)

Remove page 25 "Operating Instructions for End Customer" and add to the vehicle operating instructions.

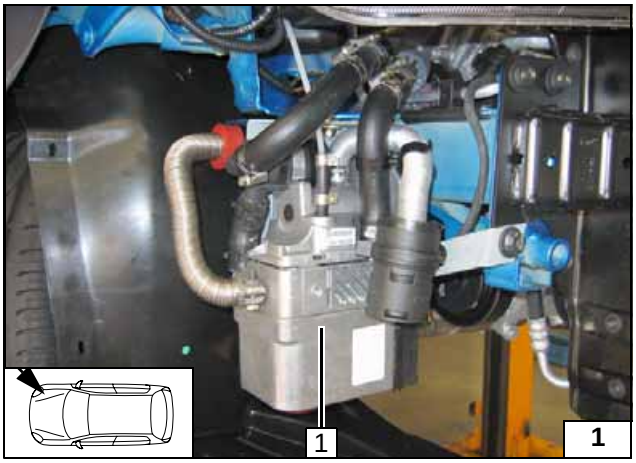

Heater unit installation location

1 Heater unit

Installation location

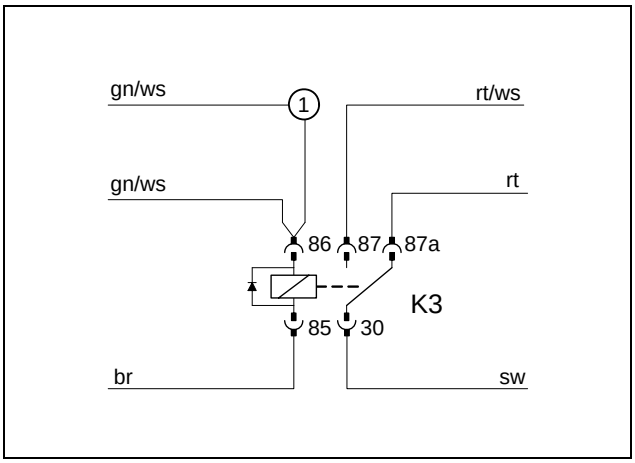

Preparing electrical system

Only with automatic air-conditioning

Produce connections as shown in wiring diagram. Fasten wire section **1** on fan wiring harness with insulating tape.

Preparing wiring harness

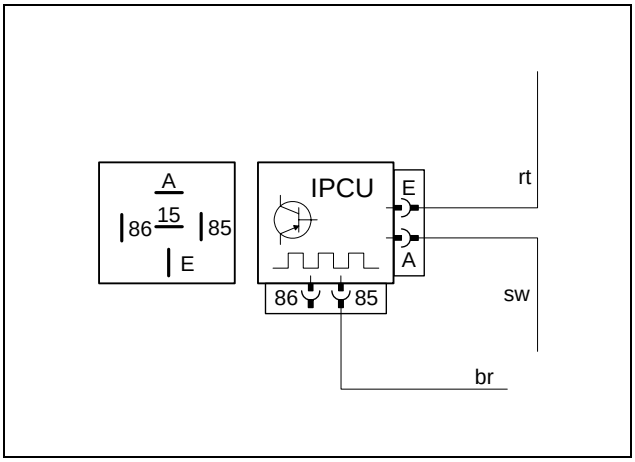

Connect included lines to IPCU. Crimp 8 mm dia. cable lug onto brown (br) line. Following adjustment values of IPCU must be checked and set if necessary prior to installation:

Duty cycle: 100 %
Frequency: 14 kHz
Voltage: 3.3 V
Function: High side active

Preassembling IPCU

Electrical Connections

Fuse holder, relay K3

Drill 5.5 mm dia. hole in cable duct at Position **1** and **2** while watching lines located behind duct.

1 M5x16 bolt, flanged nut
2 M5x16 bolt, washer, retaining plate for fuse holder, flanged nut
3 Fuse holder
4 K3 relay

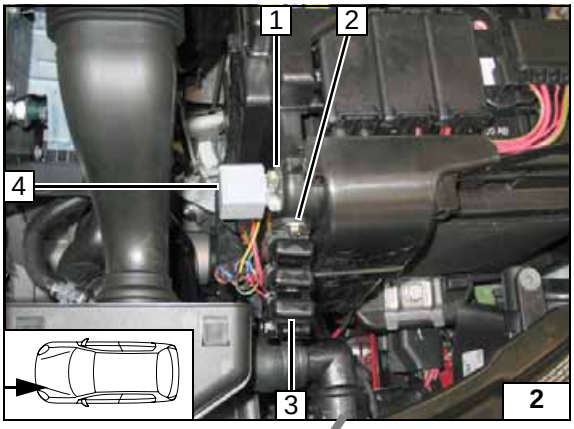

Summer/winter switch option

1 Summer/winter switch, drilled hole 12 mm dia.

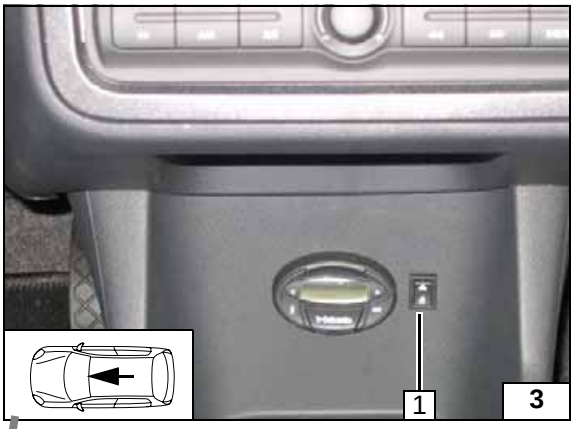

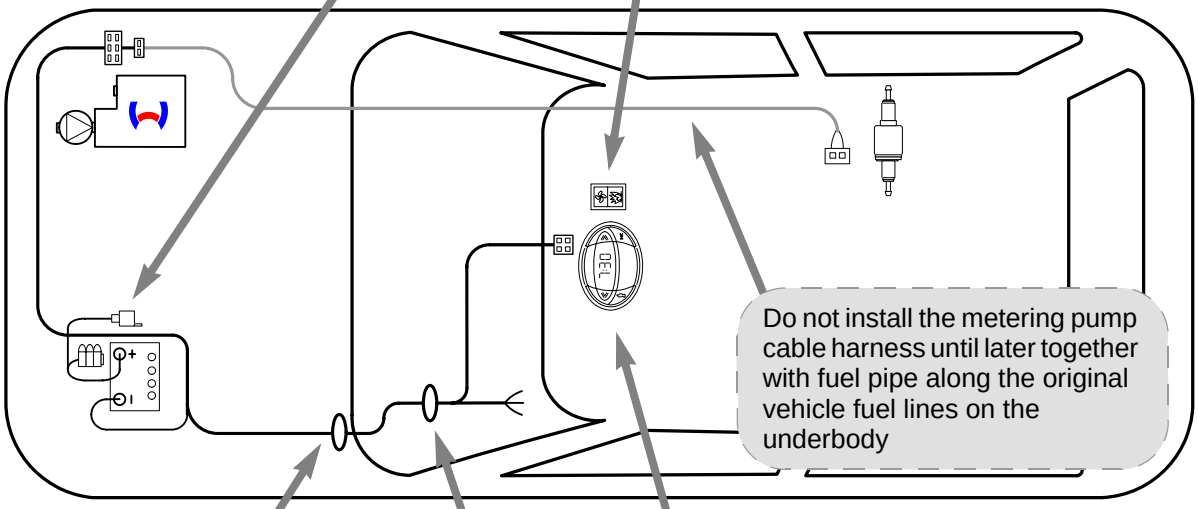

Wiring harness installation diagram

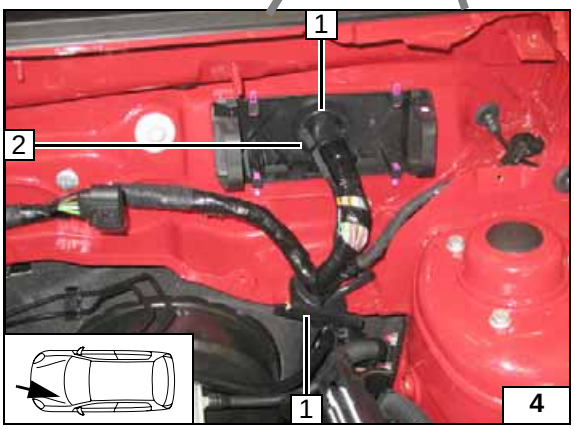

Wiring harness pass through

1 Protective rubber plug [2x]
2 Wiring harnesses of clock, fan controller and additional green/white (gn/ws) wire with automatic air-conditioning

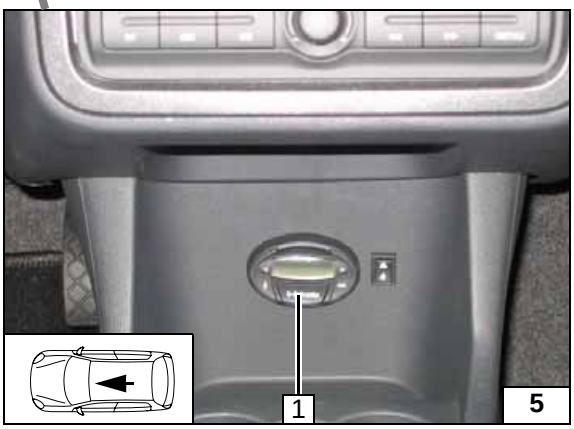

Digital timer

1 Digital timer

Fan controller for manual air conditioning

Wiring diagram

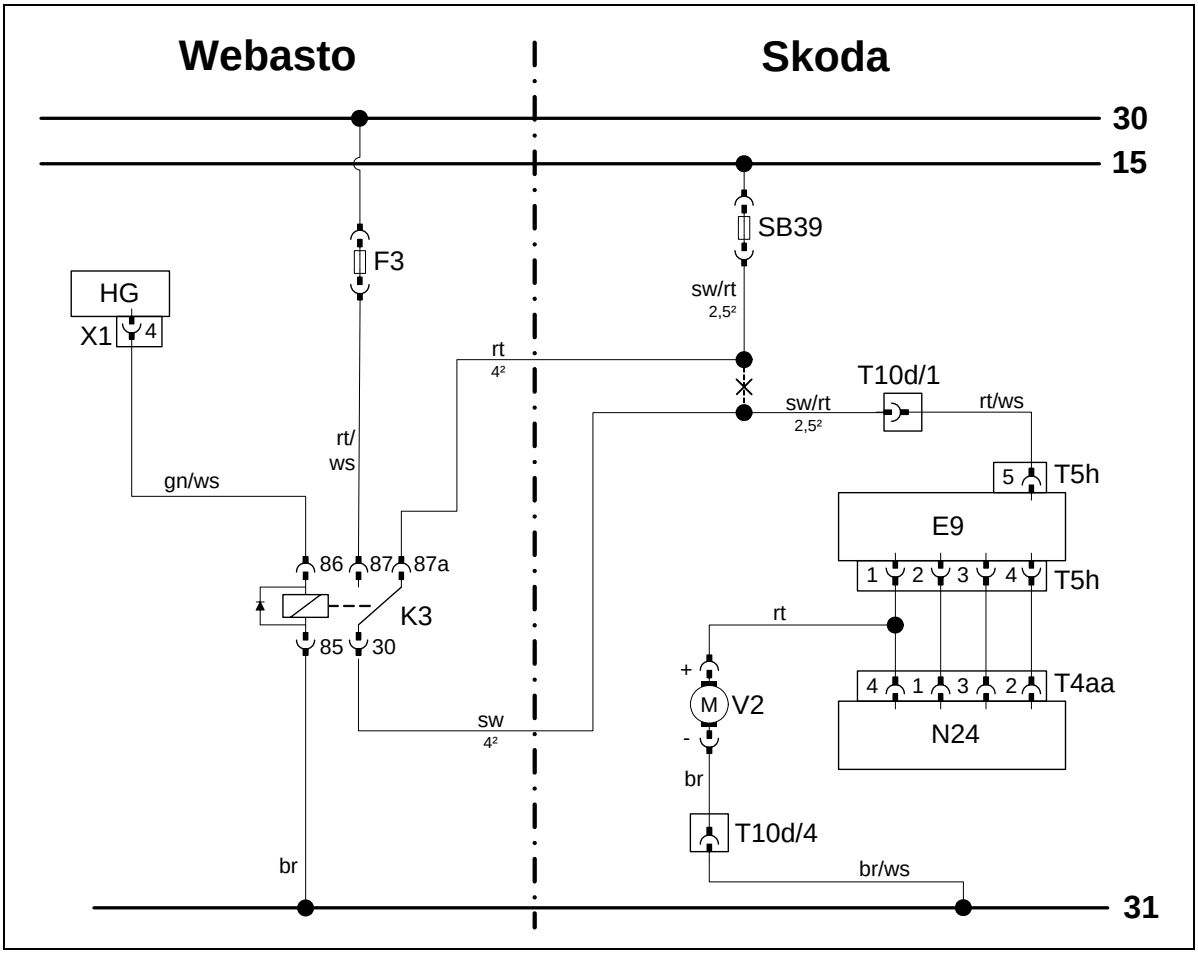

Legend

Webasto components		Vehicle components		Colors and symbols	
HG	Heater unit	E9	Fan switch	rt	red
X1	6-pin heater unit connector	T5h	5-pin connector E9	ws	white
F3	25 A fuse	N24	Resistor group	sw	black
K3	Fan relay	T4aa	4-pin connector N24	br	brown
		SB39	25 A fuse	gn	green
		T10d	10-pin connector		
		V2	Fan motor		
				X	Cutting point
				Wiring colors may vary.	

Connecting central electrical box

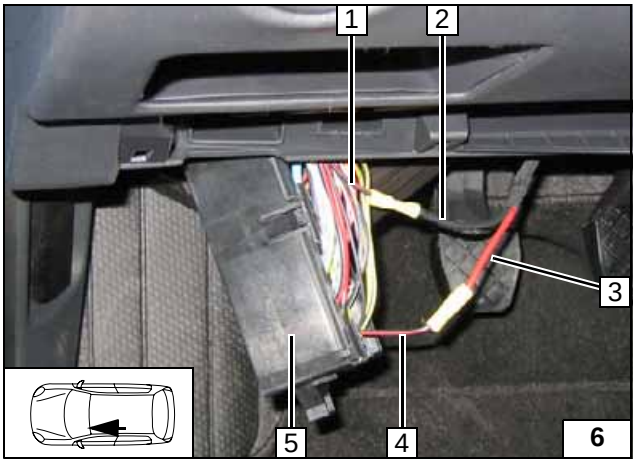

Connection to central electrical box **5**. Produce connections as shown in wiring diagram.

1 Black/red (sw/rt) wire of connector T10d/1
2 Black (sw) wire from K3/30
3 Red (rt) wire from K3/87a
4 Black/red (sw/rt) wire of fuse SB39, 25 A

Automatic air-conditioning fan controller

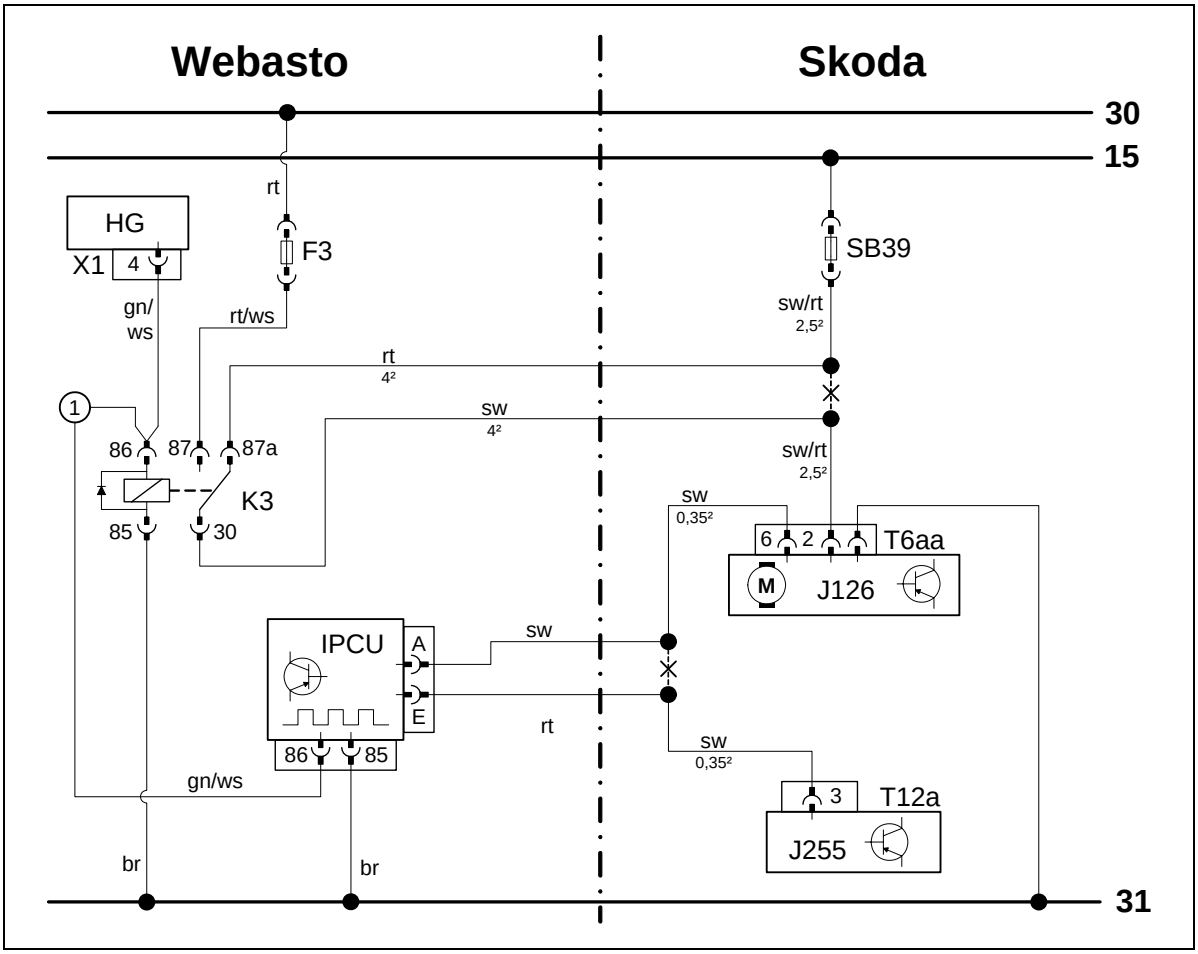

Webasto components		Vehicle components		Colors and symbols	
HG	Heater unit	J126	Fan unit	rt	red
X1	6-pin heater unit connector	T6aa	6-pin connector J126	ws	white
F3	25 A fuse			sw	black
K3	Fan relay	J255	Air-conditioning control panel	br	brown
IPCU	Pulse width modulator	T12a	12-pin connector J255	gn	green
		SB39	25 A fuse		
IPCU adjustment values:					
Duty cycle:	100 %				
Frequency	14 kHz				
Function	High side active			**X**	Cutting point
Voltage	3.3 V			Wiring colors may vary.	

Wiring diagram

Legend

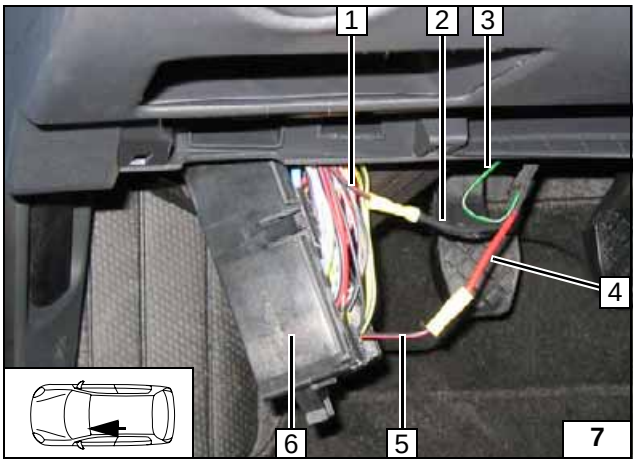

Connection on central electrical box **6** to fan module.
Produce connections as shown in wiring diagram.

1 Black/red (sw/rt) wire of connector T6aa/2
2 Black (sw) wire from K3/30
3 Additional green/white (gn/ws) wire of IPCU
4 Red (rt) wire from K3/87a
5 Black/red (sw/rt) wire of fuse SB39, 25 A

Connecting central electrical box

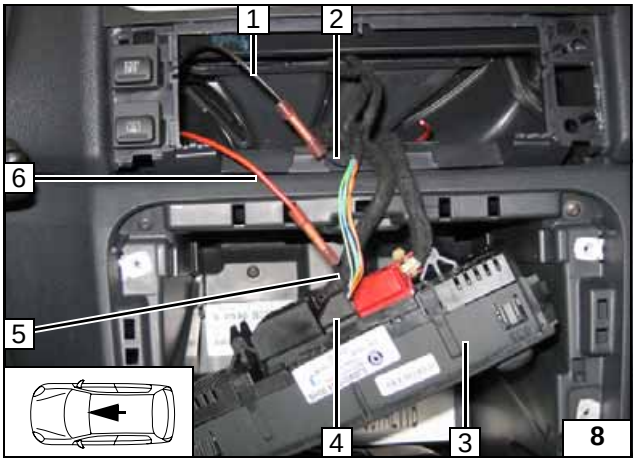

Connection on connector T12a **4**, Pin 3 of A/C control panel **3**.
Produce connections as shown in wiring diagram.

1 Black (sw) wire of IPCU/A
2 Black (sw) wire of connector T6aa/6
5 Black (sw) wire of connector T12a/3
6 Red (rt) wire of IPCU/E

Connecting air-conditioning control element

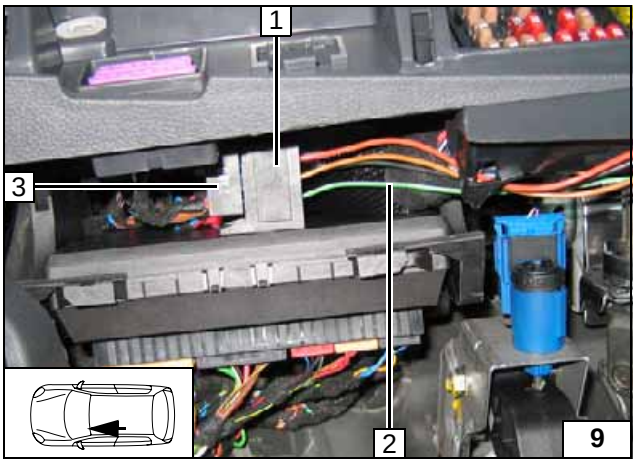

Connect additional green/white (gn/ws) wire **2** to IPCU/86.
Program ICPU **3** accordingly before mounting (see Preparing electrical system).
Fasten IPCU socket **1** with double-sided adhesive tape.

Installing IPCU

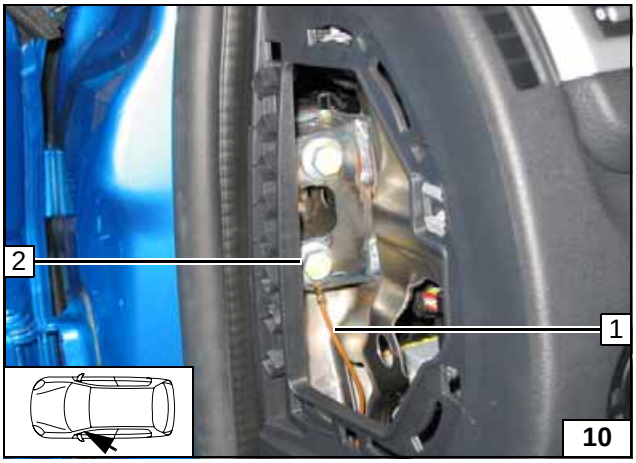

1 Brown (br) wire from IPCU/85, 8 mm dia. cable lug
2 Original vehicle bolt

Ground connection of IPCU

Remote option (Telestart)

Installing receiver

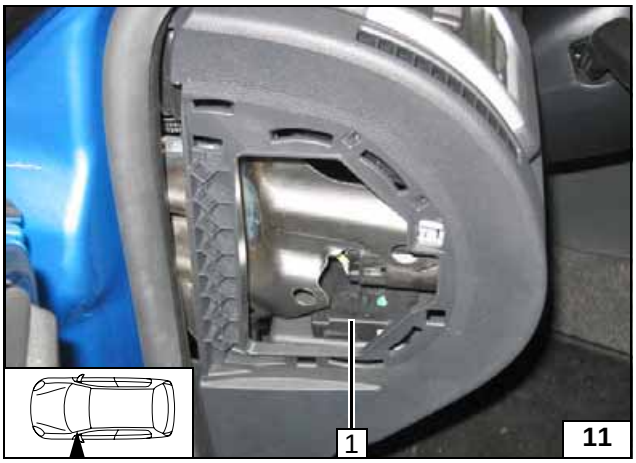

1 Install receiver with double-sided adhesive tape as shown.

Installing antenna

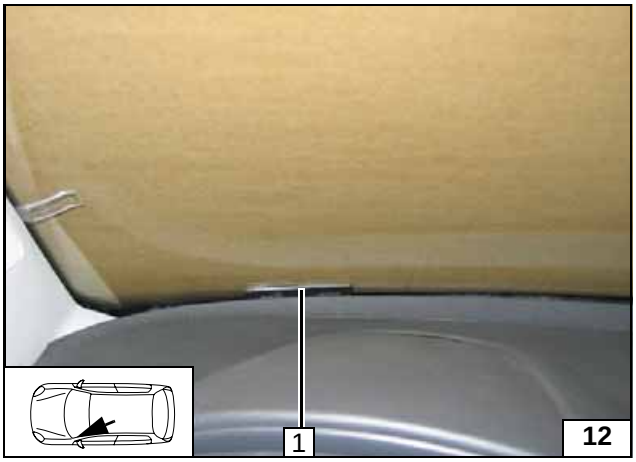

1 Antenna

Installing temperature sensor

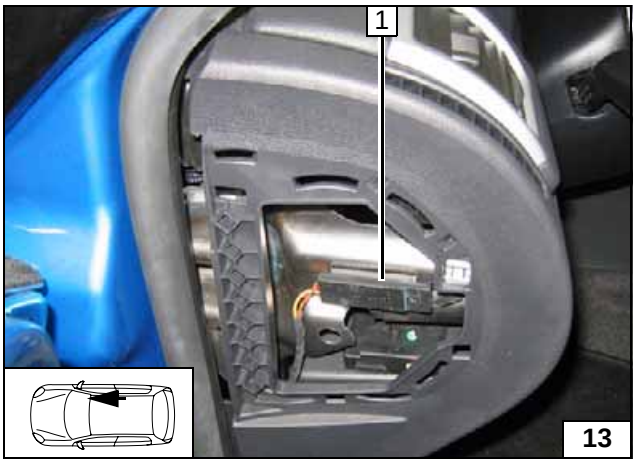

Temperature sensor for HTM100 only

1 Install temperature sensor with double-sided adhesive tape as shown.

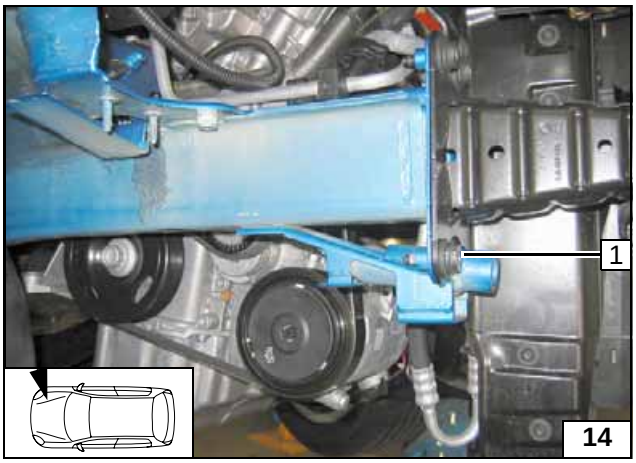

Preparing installation location

Remove original vehicle bolt **1**; will be reused.

Unscrew-ing bolt

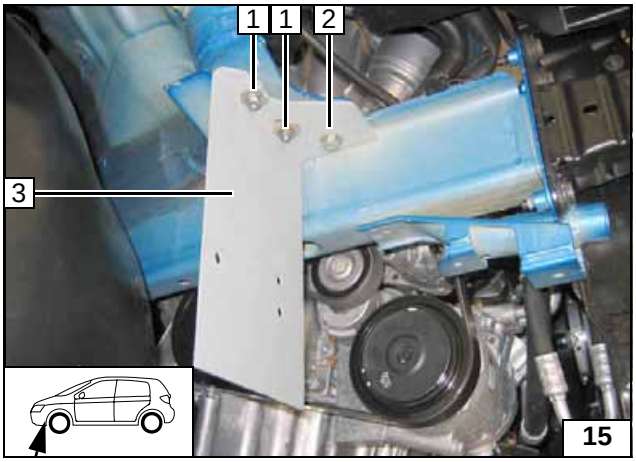

Insert one 5 mm shim each between bulb socket and bracket at Position **1**.
Loosely mount nuts on Position **1**, align bracket to Position **2** and mount M8x30 bolt!
Tighten nuts at position **1**.

1 Flanged nut, large diameter washer, shim [2x each]
2 M8x30 screw, spring lock washer, washer
3 Bracket

Installing bracket

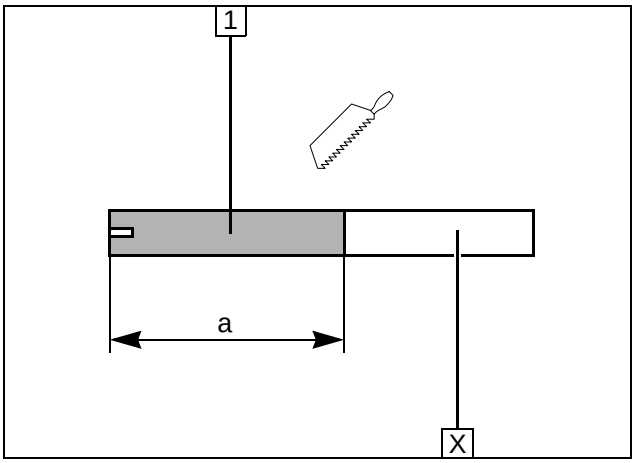

Preparing heater unit

1 Combustion air pipe
a = 230 mm

Discard section **X**

Cutting combus-tion air pipe to length

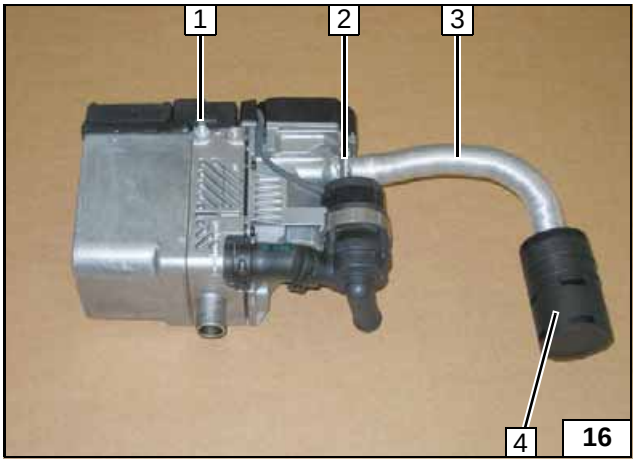

Ejot stud **1**, tightening torque 10 Nm.

2 27 mm dia. hose clamp
3 Combustion-air intake pipe
4 Combustion-air intake muffler

Installing intake pipe

Installing heater unit

Insert two 6 mm dia. washers between heater unit and bracket at Position **1**.
Tighten EJOT screws to 10 Nm!

1 Ejot screw, washer [2x]
2 Ejot screw

Installing heater unit

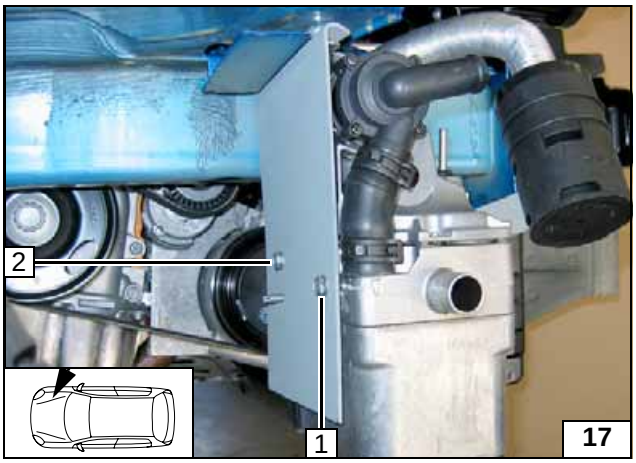

Ejot screw bolt **3**, tightening torque 10 Nm.

1 Strut
2 Original vehicle bolt

Installing heater unit

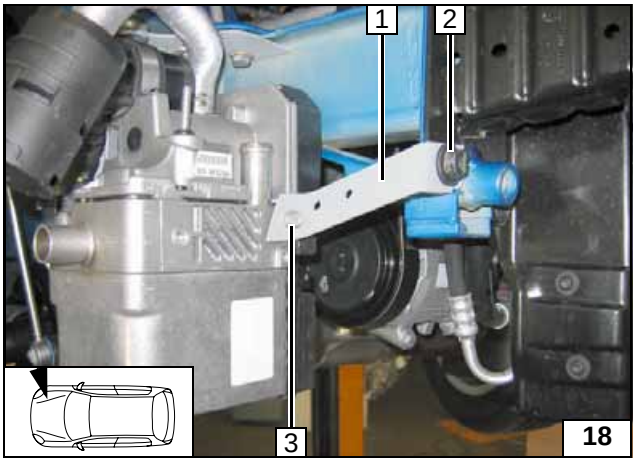

1 Wiring harness of heater unit
2 Clip-type cable tie in hole of strut

Mounting wiring harness

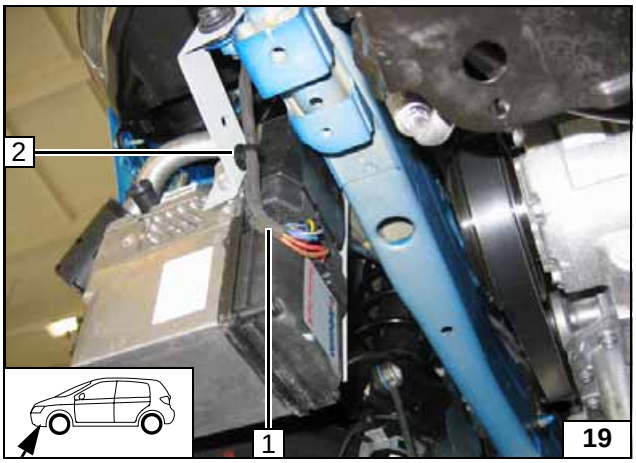

Cut edge protection in half.

1 100 mm edge protection

Installing edge protection

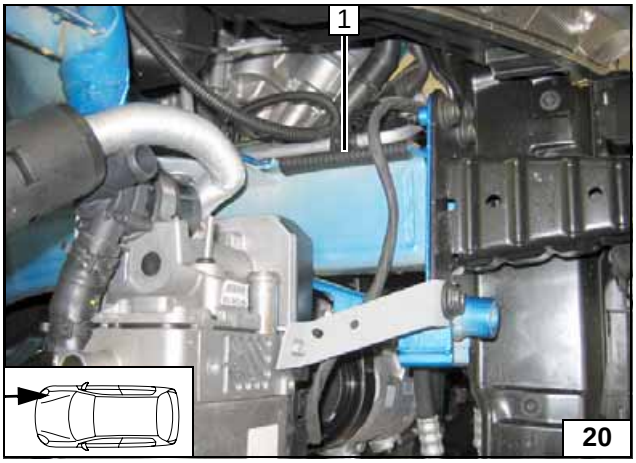

Exhaust gas

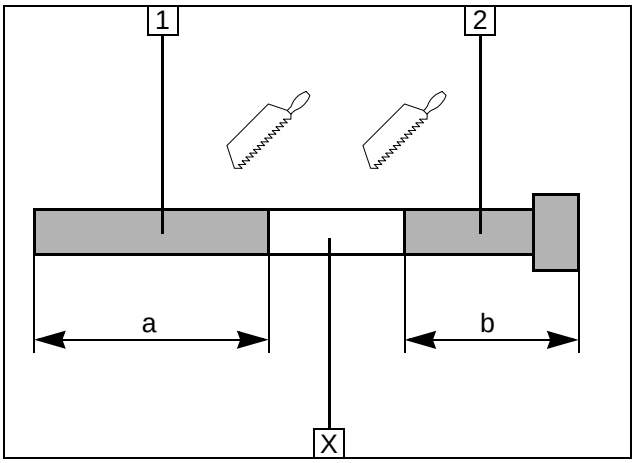

1 Exhaust pipe
a = 370 mm
2 Exhaust end section
b = 235 mm

Discard section **X**

Preparing exhaust pipe

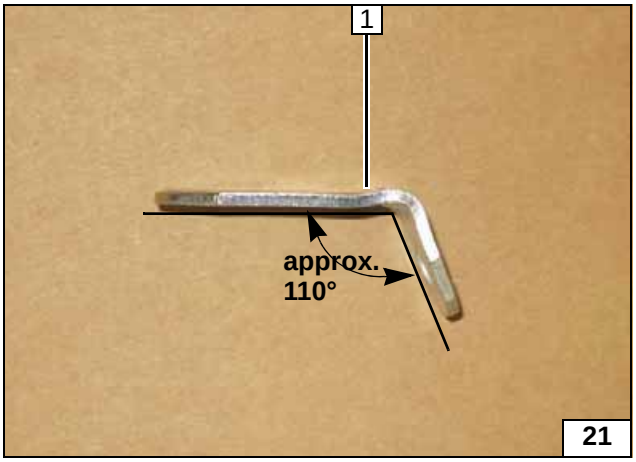

Bend open angle bracket **1** to approx. 110°.

Preparing angle bracket

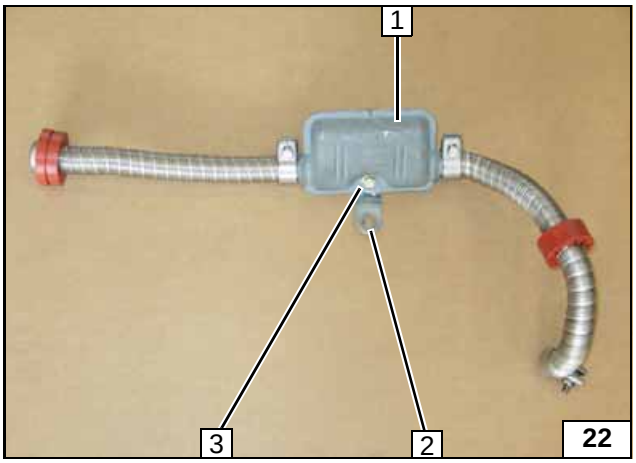

1 Exhaust muffler
2 Angle bracket
3 M6x20 bolt, flanged nut

Preassembling muffler

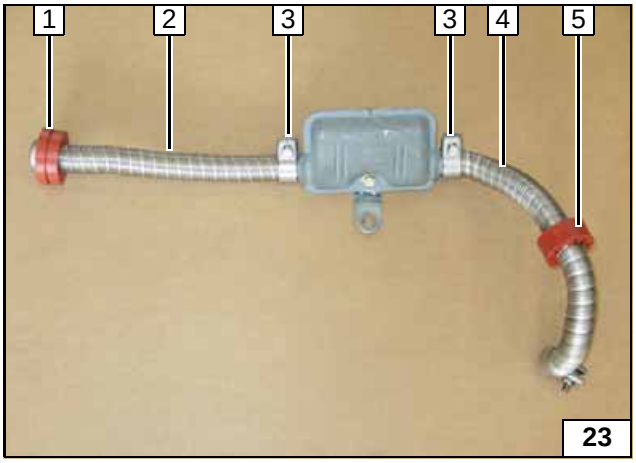

1 Push on red (rt) rubber isolator with groove
2 Exhaust end section
3 Hose clamp [2x]
4 Exhaust pipe
5 Push on red (rt) rubber isolator

Premounting exhaust system

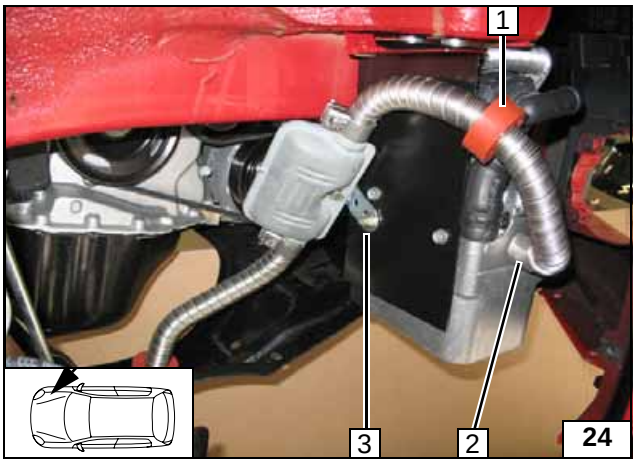

1 Position red (rt) rubber isolator
2 Hose clamp
3 Flanged nut on stud bolt

Installing exhaust system

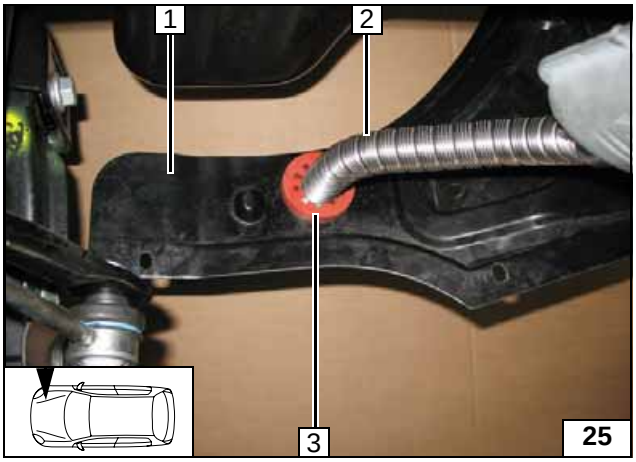

Drill 42 mm dia. hole in underride protection **1** at Position **3**.
Insert red (rt) rubber isolator with groove **3** with exhaust end section **2** in hole.

Inserting exhaust end section

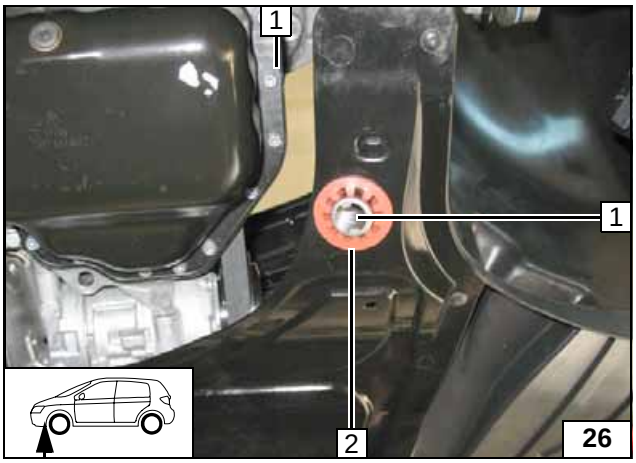

Align exhaust end section **1** flush on red rubber isolator **2**.

Positioning rubber isolator

Water

WARNING!
Any coolant running off should be collected using an appropriate container. Install hoses so that they are kink-free. Unless specified otherwise, always fasten using cable ties. Position clamps so that no other hose can be damaged! When installing the coolant hose, the heater unit must be filled with coolant.
The connection should be "inline" based on the following diagram:

Coolant routing diagram

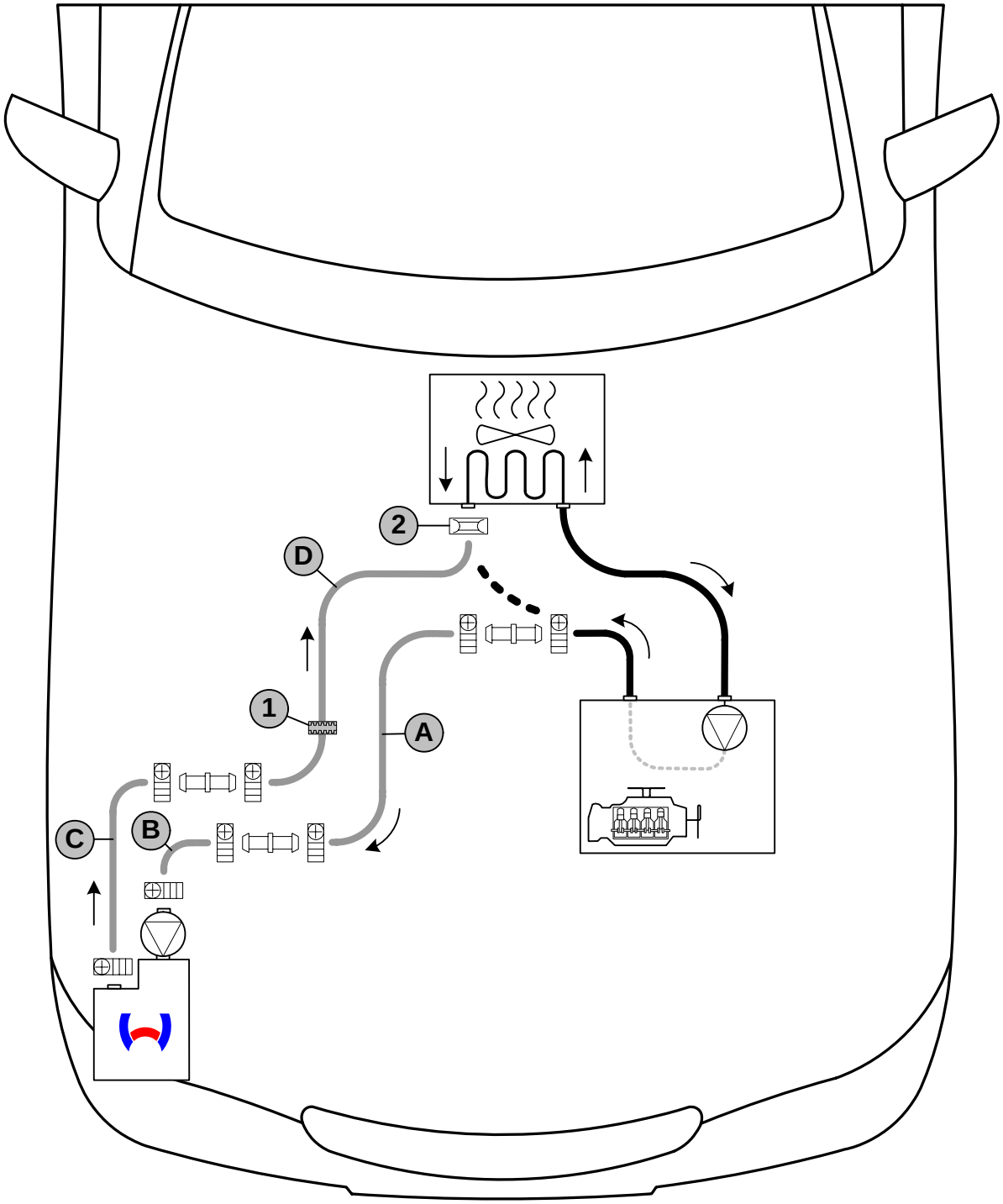

All hose clamps = 20-27 mm dia.!
1 = Black (sw) rubber isolator .
2 = Original vehicle spring clip .
All connecting pipes = Ø 18x20.

Cutting coolant hoses to length

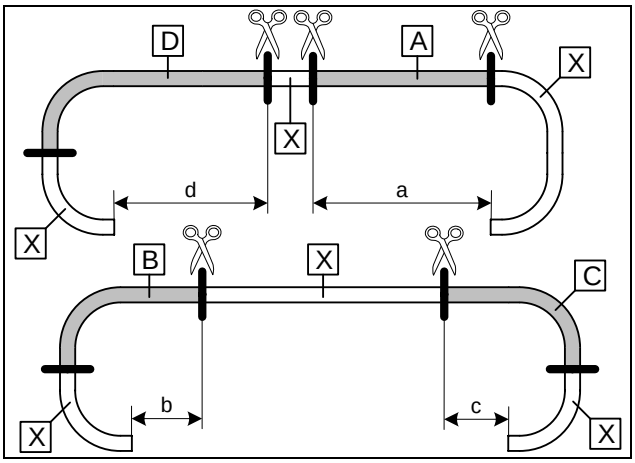

18 mm dia. hose **A** and **D**.
20 mm dia. hose **B** and **C**.

a = 1,050 mm
b = 60 mm
c = 60 mm
d = 920 mm

Discard section **X**

Preparing angle bracket

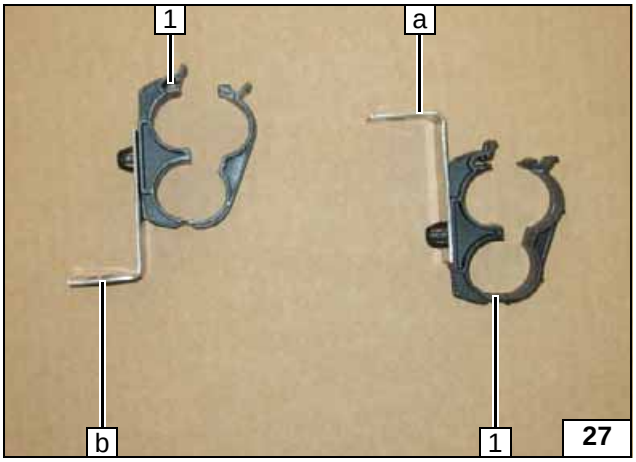

Premount angle bracket **a** and **b** as shown.

1 Hose bracket [2x]

Installing angle bracket b

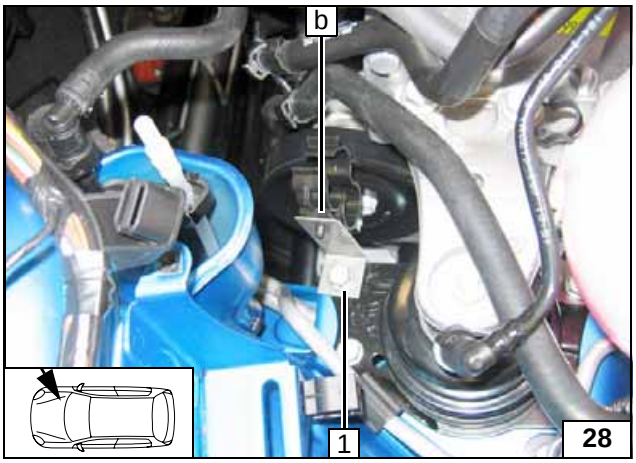

Observe working instructions of vehicle manufacturer.

b Premounted angle bracket
1 Original vehicle bolt

Installing angle bracket a

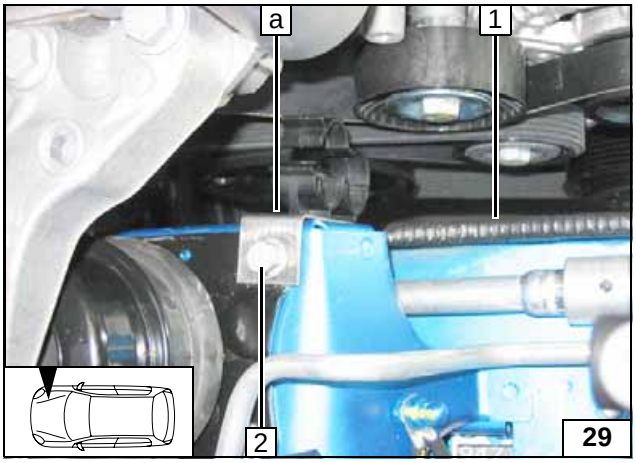

Observe working instructions of vehicle manufacturer.

a Premounted angle bracket
1 Insert 100 mm edge protection
2 Original vehicle bolt

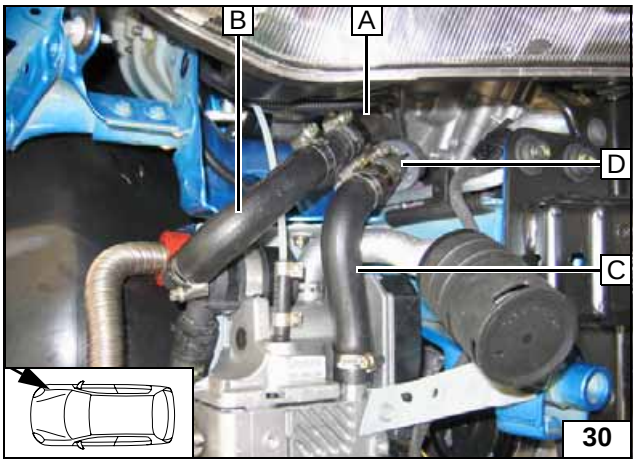

Connect hose **A** and **B**, and hose **C** and **D**.

Connecting heater unit

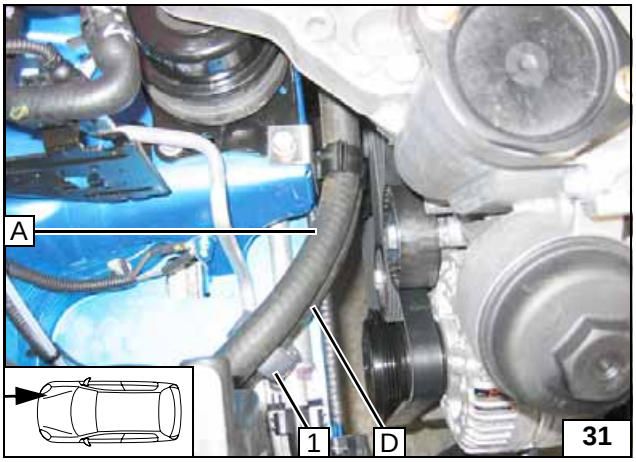

Slide black (sw) rubber isolator **1** onto hose **D** and position.

Routing in engine compartment

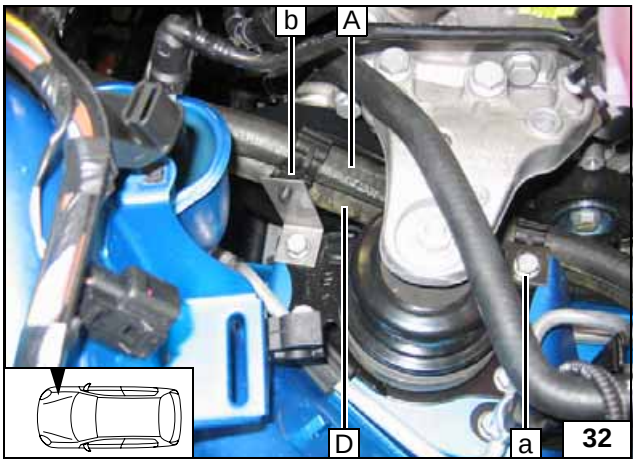

Route hose **A** and **D** through prepared hose bracket (angle bracket **b** and **a**).

Routing in engine compartment

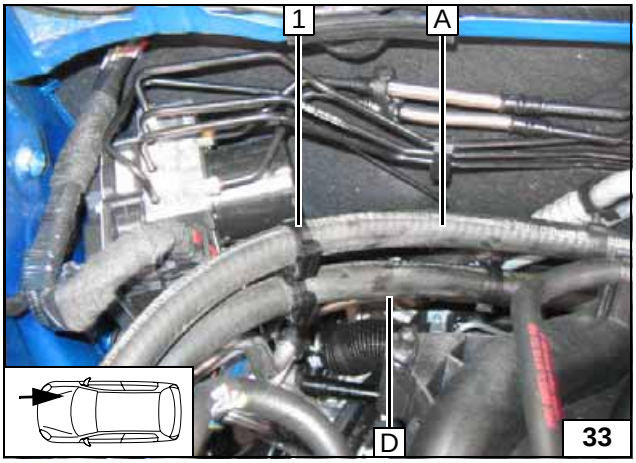

Mount double clip **1** between hose **A** and **D**.

Mounting clip

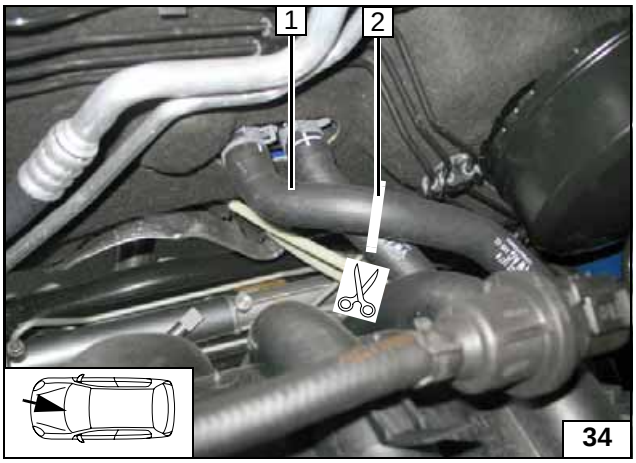

Cutting point on 1.2 liter

Pull off hose section **1** on connection piece of heat exchanger inlet and discard. Spring clip will be reused.

2 Cutting point

Cutting point on 1.2 liter

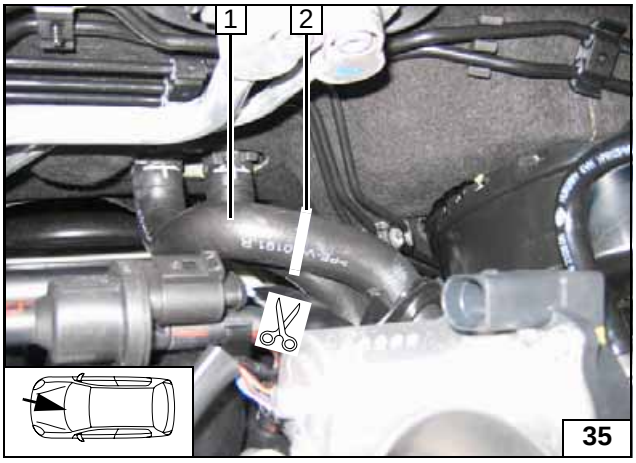

Cutting point on 1.4 and 1.6 liter

Pull off hose section **1** on connection piece of heat exchanger inlet and discard. Spring clip will be reused.

2 Cutting point

Cutting point on 1.4; 1.6 liter

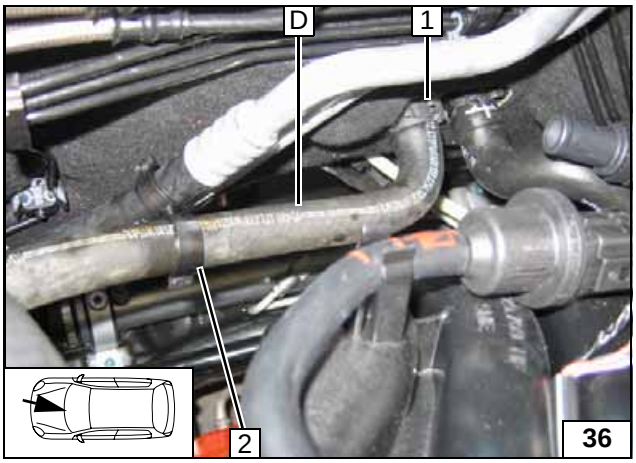

All vehicles

Connect hose **D** with 90° elbow on connection piece of heat exchanger inlet.

1 Original vehicle spring clip
2 Spacer bracket

Connecting heat exchanger inlet

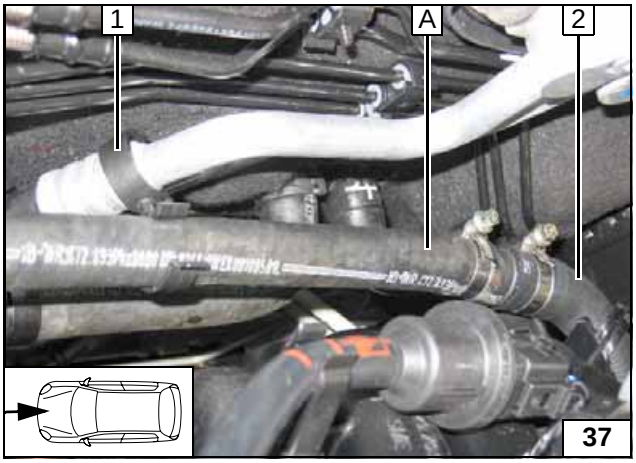

Before connecting, fill the coolant hoses with coolant.

1 Spacer bracket
2 Engine outlet hose section

Connection to engine outlet

Fuel

CAUTION!
Open the vehicle's fuel tank cap, ventilate the tank and then re-close the tank lock.

Catch any fuel running off with an appropriate container.

Install fuel line and metering-pump wiring harness so that they are protected against stone impact.
Unless specified otherwise, always fasten using cable ties.
Mount the fuel line and wiring harness with rub protection on sharp edges.

WARNING!
The fuel line and wiring harness are routed to the metering pump in as shown in the wiring harness routing diagram.

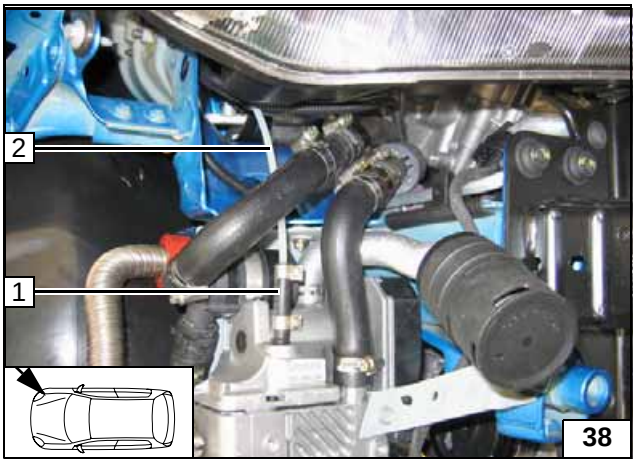

Route fuel line **1** and wiring harness of metering pump through line duct to installation location of metering pump.

1 Hose section, 10 mm dia. hose clamp [2x]
2 Fuel line

Connection to heater unit

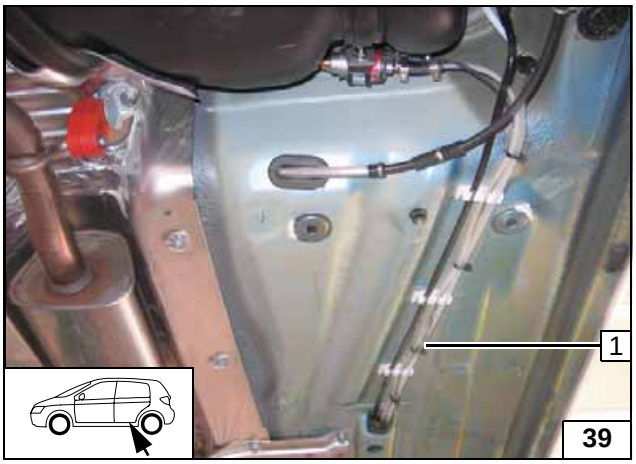

Installation location in front of vehicle fuel tank on right!

1 Wiring harness of metering pump, fuel line of heater unit

Installation location of metering pump

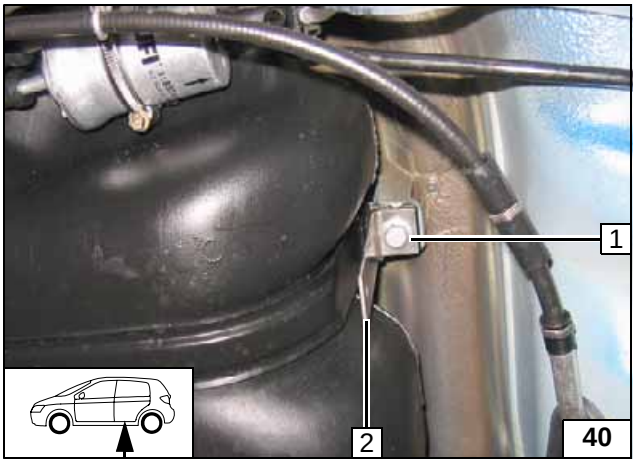

1 Original vehicle bolt
2 Angle bracket

Installing angle bracket

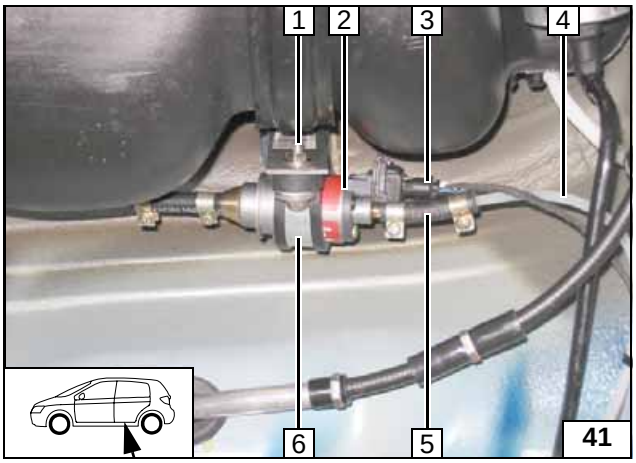

1 Silent block, flanged nut [2x]
2 Metering pump
3 Wiring harness of metering pump, connector mounted
4 Fuel line
5 Hose section, 10 mm dia. hose clamps [2x]
6 Rubber-coated pipe clamp

Installing metering pump

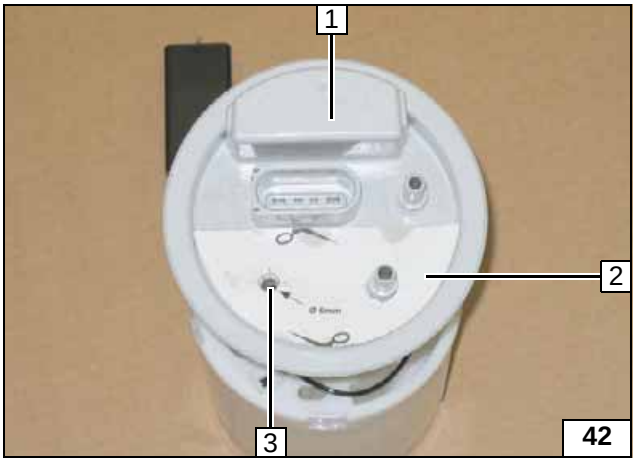

Remove and dismantle fuel-tank sending unit **1** according to manufacturer's instructions.

2 Template
3 Copy hole pattern, 6 mm dia. hole

Removing fuel

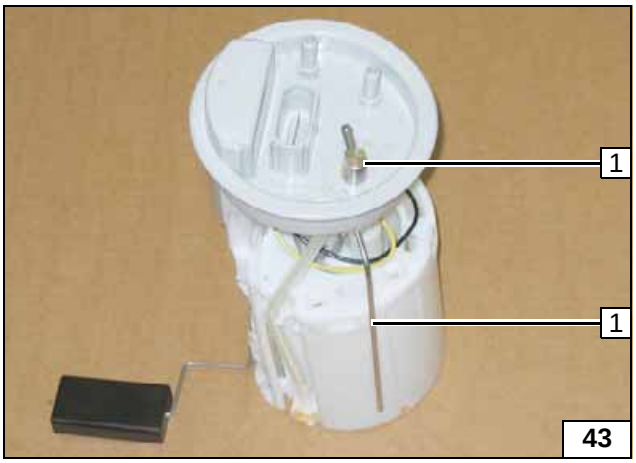

Shape fuel standpipe **1** according to template, cut to length and install, see "installation instructions".

Installing fuel standpipe

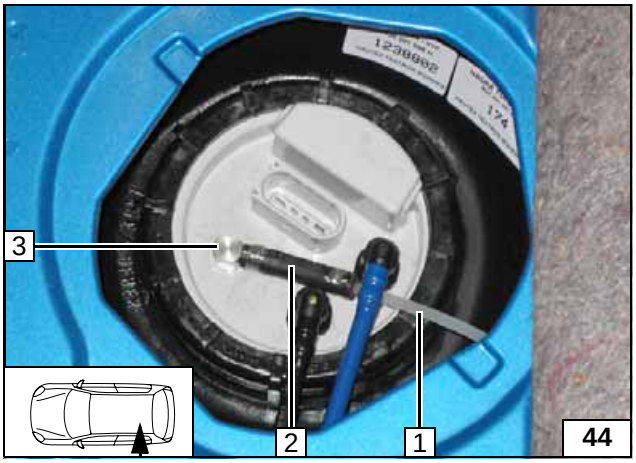

Install fuel-tank sending unit according to manufacturer's specifications.

1 Fuel line
2 Molded hose, 10 mm dia. Caillau clamp [2x]
3 Fuel standpipe

Connecting fuel line

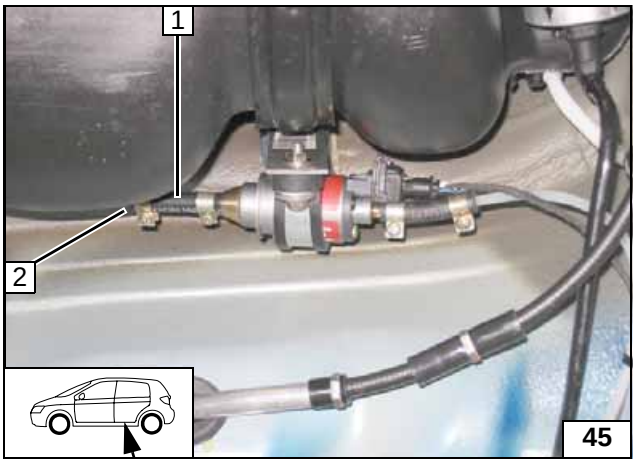

Fuel line **2** from fuel standpipe on intake side of metering pump [side without connector]. Check the position of the components; adjust if necessary. Check that they have free clearance.

1 Hose section, 10 mm dia. hose clamp [2x]

Connecting to metering pump

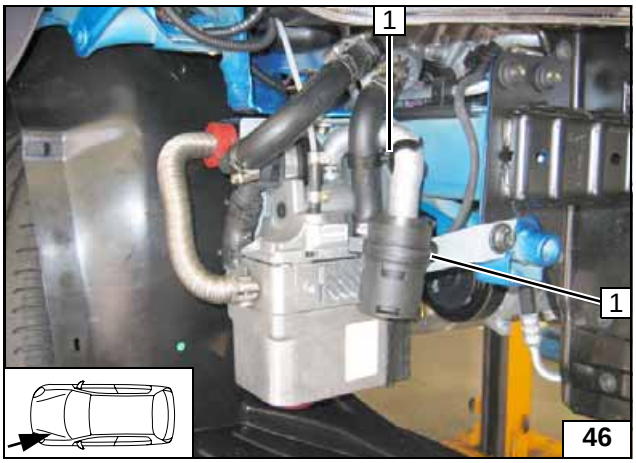

Combustion air

1 Spacer bracket
2 Insert retaining clip in hole

Installing spacer bracket

Final Work

WARNING!
Reassemble the disassembled components in reverse order.
Check all hoses, clamps and all electrical connections for firm seating.
Secure all loose cables using cable ties.
Only use manufacturer-approved coolant.
Spray the heater unit components with anti-corrosion wax (Tectyl 100K, Order No. 111329).

- Connect the battery
- Fill and bleed the coolant circuit according to the vehicle manufacturer's specifications.
- Set the digital timer.
- Set the manual air conditioning or automatic air conditioning according to the "operating instructions for the end customer".
- Check the proper operation of the additional heater, see the operating instructions/installation instructions.
- Attach the "Switch off additional heater before refueling" sticker to the left-hand B-pillar.

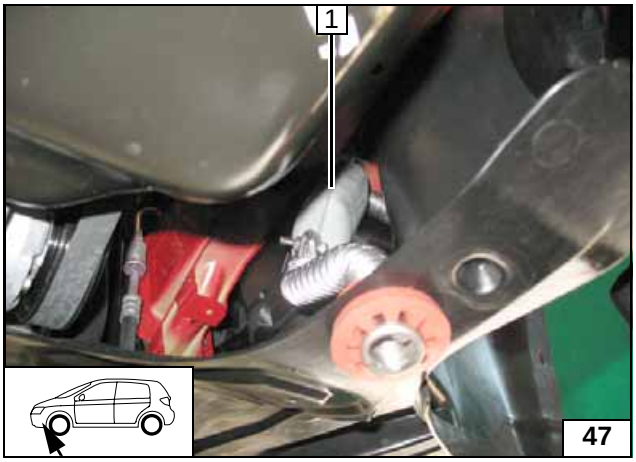

Ensure sufficient spacing to neighboring components (especially to wheel-well inner panel); correct if necessary.

1 Muffler

Aligning muffler

Webasto AG
Postfach 80 - 82132 Stockdorf
- Hotfax 0395 / 5592-353

Operating Instructions for End Customer

Please remove page and add to the vehicle operating instructions.

Note:
We recommend matching the heating time to the driving time.
Heating time = driving time
Example:
For a driving time of approx. 20 min. (in one direction), we recommend not exceeding a switch-on time of 20 min.

If the summer/winter switch option has been installed, this must be switched in accordance with the time of year. The heater unit will then switch on heating in the Winter position or only the vehicle fan for ventilating the vehicle interior in the Summer position .

Before parking the vehicle, make the following settings:

Automatic air-conditioning



1 Air outlet to windshield
2 Set temperature to "HI“

Manual air conditioner

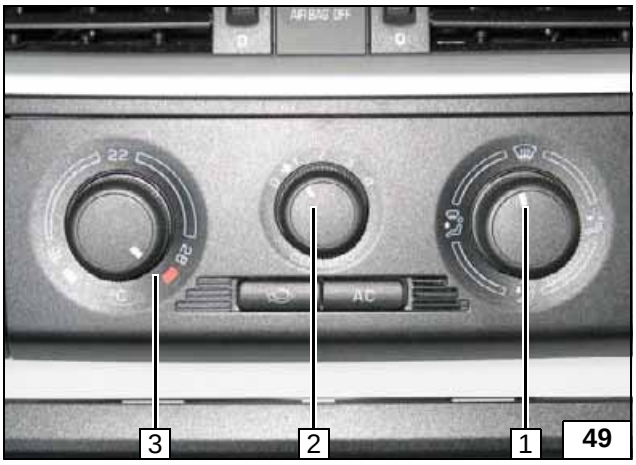

1 Air outlet to windshield
2 Set fan to level "1“, max. "2"
3 Set temperature to "max."

Template for Fuel sender

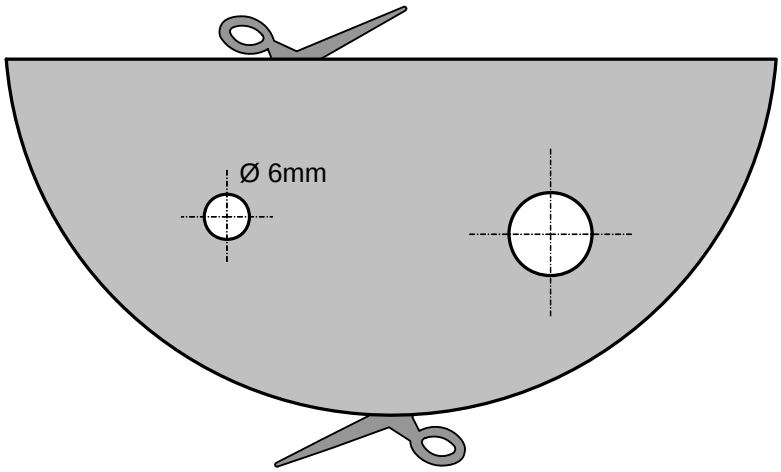

100 mm

Scale 1:1

Compare the size of the printed version with dimension lines.
Permitted tolerance a maximum of 2%.

Set the printer settings to “no margin” or “minimize margins” and 100% of the normal size.

100 mm

0

1311743B

Template for Fuel Standpipe

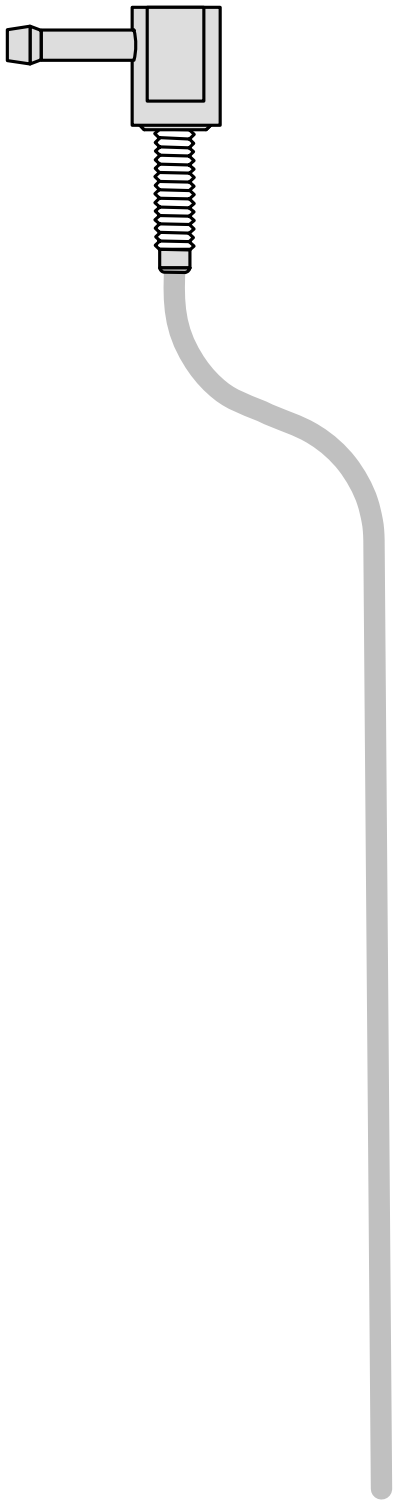

100 mm

Scale 1:1

Compare the size of the printed version with dimension lines.
Permitted tolerance a maximum of 2%.

Set the printer settings to “no margin” or “minimize margins” and 100% of the normal size.

100 mm

0

1311743B